LG SPLIT COMPACT DEDICATED OUTDOOR AIR SYSTEM (DOAS) INSTALLATION MANUAL

Variable Refrigerant Flow Split Compact DOAS

ARND***DCR4 Series
ARND063DER4 Series

(600, 900, 1,500 and 2,000 CFM)

PROPRIETARY DATA NOTICE

This document, as well as all reports, illustrations, data, information, and other materials are the property of LG Electronics U.S.A., Inc., and are disclosed by LG Electronics U.S.A., Inc. only in confidence.

⃠ Do not throw away, destroy, or lose this manual.
Please read carefully and store in a safe place for future reference.
Content familiarity is required for proper installation.

The instructions included in this manual must be followed to prevent product malfunction, property damage, injury, or death to the user or other people. Incorrect operation due to ignoring any instructions will cause harm or damage. The level of seriousness is classified by the symbols described by the summary list of safety precautions on page 4.

For more technical materials such as submittals, catalogs, engineering manuals, and forms, visit www.lghvac.com.

For continual product development, LG Electronics U.S.A., Inc. reserves the right to change specifications without notice.

© LG Electronics U.S.A., Inc.

TABLE OF CONTENTS

Safety Precautions 4-7

Unit Nomenclature 8

Product Overview 9-13
Interior Components 9-10
Electrical Components 11-13

General Data 14-25
Specifications 14
Electrical 15
External Dimensions 16-18
Wiring 19-21
Refrigerant Flow - Cooling 22
Refrigerant Flow - Dehumidification 23
Refrigerant Flow - Heating 24
Sound Power Levels 25

Installation 26-31
Receiving 26
Handling 26
Storage / Removing 26
Assemblies 26
Airflow Arrangement 26
Location Selection 27
Roughing In 27
Mounting Dimensions 28
Ductwork Configuration 29
Service Clearances 30
Piping Connections 30
Field-Installed Outdoor Air (OA) Filter 31

Unit Piping 32-36
Refrigerant Safety 32
Piping Handling 32
Brazing Procedure 33
Pipe Support Location 33
Insulate 33
Condensate Drain Connections 34
Condensate Pump Connection 34
Unit Drain Information 34
Gravity Condensate Pipe Connection 35
Installing the Condensate Drain Pipe 35
Refrigerant Piping Installation 36
Refrigerant System Eng., Allowable Pipe Length 36

Electrical Information 37-43
General Information 37
Separating Power Wiring and Communication Cables 37
Power Wiring 38
Communication Cable Connections 38
Terminal Connections 38
Power Supply / Power Wiring Specifications 39
Communication Cable Specs. from ODU to DOAS 40
Connection Procedure 41
Field Wiring 41
Field-Mounted Sensors 42-43

Leak Pressure Check / Evacuation 44-48
Leak / Pressure Check 44-45
Ambient Conditions 45
Evacuation 46-48

Charging Refrigerant 49
Refrigerant Charge Worksheet 49

Startup Configuration 50
Checks Before Initial Startup 50

Electric Preheater Accessory 51-67
Safety Precautions 51-53
Overview 54
General Data 55
Dimensions 56-57
Wiring Diagram 58-59
Installation Procedure 60-62
Sequence Setting 63-67

Controller 68-89
Overview 68
Electrical Specifications 68
Connecting to the Web UI 68
Service Password 69
Startup Settings 69
IP Address 69
DOAS Unit Address Setting 69
Central Controller Setting 70
AC Smart / ACP Controller Setup 71-72
BMS Configuration 73
Main Control Board Terminal Connections 74
CAREL Control Board Terminal Connections 74
LG Control Board Layout 75
UI Module 76
NTC Module 77
EEV Module 78
Navigation 79-81
Software Update 82
BACnet / Modbus Object List 83-89

Installation Checklist 90-91

Limited Warranty 92

©LG Electronics U.S.A., Inc., Englewood Cliffs, NJ. All rights reserved. "LG" is a registered trademark of LG Corp.

SAFETY PRECAUTIONS

The instructions below must be followed to prevent product malfunction, property damage, injury or death to the user or other people. Incorrect operation due to ignoring any instructions will cause harm or damage. The level of seriousness is classified by the symbols below.

TABLE OF SYMBOLS

⚠ DANGER	*This symbol indicates an imminently hazardous situation which, if not avoided, will result in death or serious injury.*
⚠ WARNING	*This symbol indicates a potentially hazardous situation which, if not avoided, could result in death or serious injury.*
⚠ CAUTION	*This symbol indicates a potentially hazardous situation which, if not avoided, may result in minor or moderate injury.*
⚠ NOTE	*This symbol indicates situations that may result in equipment or property damage accidents only.*
Note:	*This symbol indicates information related to the current procedure.*
⃠	*This symbol indicates an action that should not be performed.*

INSTALLATION

⚠ DANGER

⃠ **Do not use or store flammable gas or combustibles near the unit.**
There is risk or fire or explosion, which will result in death or serious injury.

⚠ WARNING

⃠ **Do not install or remove the unit by yourself (end-user). Ask the dealer or an LG trained technician to install the unit.**
Improper installation by the user may result in water leakage, fire, explosion, which will result in electric shock, physical injury or death.

Installation, startup, and service must be performed by a qualified installer, service agency, or gas supplier.
Improper installation, adjustment, service, maintenance, or alteration can cause personal injury or loss of life.

For replacement of an installed unit, always contact a trained service provider.
There is risk of fire, electric shock, explosion, which will result in physical injury or death.

Periodically check that the unit is not damaged.
There is risk of explosion, which will result in physical injury, or death.

Replace all control box and panel covers.
If cover panels are not installed securely, dust, water and animals may enter the unit, causing fire, electric shock, which will result in physical injury or death.

Always check for system refrigerant leaks after the unit has been installed or serviced.
Exposure to high concentration levels of refrigerant gas may lead to illness or death.

⃠ **Do not install the unit using defective hanging, attaching, or mounting hardware.**
There is risk of physical injury or death.

⃠ **Do not supply power to the unit until all wiring and piping are completed or reconnected and checked.**
There is risk of physical injury or death due to electric shock.

Wear protective gloves when handling equipment.
Sharp edges may cause personal injury.

Dispose of the packing materials safely.
- *Packing materials, such as nails and other metal or wooden parts may cause puncture wounds or other injuries.*
- *Tear apart and throw away plastic packaging bags so that children may not play with them and risk suffocation and death.*

⃠ **Do not install the unit in any location exposed to open flame or extreme heat.** ⃠ **Do not touch the unit with wet hands.**
There is risk of fire, electric shock, explosion, which will result in physical injury or death.

Install the unit considering the potential for earthquakes.
Improper installation may cause the unit to fall, resulting in physical injury or death.

⃠ **Do not change the settings of the protection devices.**
If the pressure switch, thermal switch, or other protection device is shorted and forced to operate improperly, or parts other than those specified by LG are used, there is risk of fire, electric shock, explosion, resulting in physical injury or death.

If the unit is installed in a small space, take measures to prevent the refrigerant concentration from exceeding safety limits in the event of a refrigerant leak.
Consult the latest edition of ASHRAE® (American Society of Heating, Refrigerating, and Air Conditioning Engineers) Standard 15. If the refrigerant leaks and safety limits are exceeded, it could result in personal injuries or death from oxygen depletion.

(The name "ASHRAE" and the ASHRAE logo are trademarks of the American Society of Heating, Refrigerating, and Air-Conditioning Engineers, Inc.)

Due to our policy of continuous product innovation, some specifications may change without notification.
©LG Electronics U.S.A., Inc., Englewood Cliffs, NJ. All rights reserved. "LG" is a registered trademark of LG Corp.

INSTALLATION – CONTINUED

⚠ CAUTION

Be very careful when transporting the product.

- ⃠ *Do not attempt to carry the product without assistance.*
- *Some products use polypropylene bands for packaging.* ⃠ *Do not use polypropylene bands to lift the unit.*
- *Suspend the unit from the base at specified positions.*
- *Support the unit at a minimum of four points to avoid slippage from rigging apparatus.*
- *Failure to follow these directions may result in minor or moderate physical injury.*

⚠ NOTE

Installation, startup, and service must be performed by a qualified installer, service agency, or gas supplier.
Improper installation, adjustment, service, maintenance, or alteration can cause property damage.

⃠ **Do not locate the Split Compaq DOAS product in an un-conditioned space where the relative humidity level of the surrounding air could exceed 60% RH. Temperature range in the mounted location must be maintained between 55 F and 90 F DB.**

Properly insulate all cold surfaces to prevent "sweating."
Cold surfaces such as uninsulated pipe can generate condensate that may drip and cause a slippery floor condition and/or water damage to walls.

When installing the unit in a hospital, mechanical room, or similar electromagnetic field (EMF) sensitive environment, provide sufficient protection against electrical noise.
Inverter equipment, power generators, high-frequency medical equipment, or radio communication equipment may cause the air conditioner to operate improperly. The unit may also affect such equipment by creating electrical noise that disturbs medical treatment or image broadcasting.

⃠ **Do not use the product for special purposes such as preserving foods, works of art, wine coolers, or other precision air conditioning applications.**
There is risk of property damage.

⃠ **Do not make refrigerant substitutions. Use R410A only.**
If a different refrigerant is used, or air mixes with original refrigerant, the unit will malfunction and become damaged.

⃠ **Do not install the unit in a noise sensitive area.**

When connecting refrigerant tubing, remember to allow for pipe expansion.
Improper piping may cause refrigerant leaks and system malfunction.

Take appropriate actions at the end of HVAC equipment life to recover, recycle, reclaim or destroy R410A refrigerant according to applicable U.S. Environmental Protection Agency (EPA) rules.

Periodically check that the outdoor unit is not damaged.
There is a risk of equipment damage.

Install the unit in a safe location where no one can step on or fall onto it.
There is risk of unit and property damage.

Install the drain trap to ensure adequate drainage.
There is a risk of water leakage and property damage.

⃠ **Don't store or use flammable gas / combustibles near the unit.**
There is risk of product failure.

Always check for system refrigerant leaks after the unit has been installed or serviced.
Low refrigerant levels may cause product failure.

Ductwork and other installed airflow restriction devices such as filters shall not exceed the rated maximum static pressure limits of the DOAS fan assembly.
Doing so may cause product malfunction.

OA Inlet (duct) should not be placed in an environment where may be exposed to harmful volatile organic compounds (VOCs), or in environments where there is improper air make up or supply or inadequate ventilation.

Due to our policy of continuous product innovation, some specifications may change without notification.
©LG Electronics U.S.A., Inc., Englewood Cliffs, NJ. All rights reserved. "LG" is a registered trademark of LG Corp.

SAFETY PRECAUTIONS

WIRING

⚠ DANGER

High voltage electricity is required to operate this system. Adhere to the National Electrical Codes and these instructions when wiring.
Improper connections and inadequate grounding will cause accidental injury or death.

Always ground the unit following local, state, and National Electrical Codes.

Turn the power off at the nearest disconnect before servicing the equipment.
Electric shock will cause physical injury or death.

Properly size all circuit breakers or fuses.
There is risk of fire, electric shock, explosion, resulting in physical injury or death.

⚠ WARNING

The information contained in this manual is intended for use by an experienced, trained electrician familiar with the U.S. National Electric Code (NEC) who is equipped with the proper tools and test instruments.
Failure to carefully read and follow all instructions in this manual can result in injury or death.

Ensure the unit is connected to a dedicated power source that provides adequate power.
If the power source capacity is inadequate or the electric work is not performed properly, it may cause fire, electric shock, resulting in physical injury or death.

Refer to local, state, and federal codes, and use power wires of sufficient current capacity and rating.
Wires that are too small may generate heat and cause a fire, resulting in physical injury or death.

Secure all field wiring connections with appropriate wire strain relief.
Improperly securing wires will create undue stress on equipment power lugs. Inadequate connections may generate heat, cause a fire, resulting in physical injury or death.

Properly tighten all power connections.
Loose wiring may overheat at connection points, causing a fire, resulting in physical injury or death.

⚠ NOTE

The information contained in this manual is intended for use by an experienced, trained electrician familiar with the U.S. National Electric Code (NEC) who is equipped with the proper tools and test instruments.
Failure to carefully read and follow all instructions in this manual can result in equipment malfunction or property damage.

⃠ **Do not supply power to the unit until all electrical wiring, controls wiring, piping, installation, and refrigerant system evacuation are completed.**
The system will malfunction.

Due to our policy of continuous product innovation, some specifications may change without notification.
©LG Electronics U.S.A., Inc., Englewood Cliffs, NJ. All rights reserved. "LG" is a registered trademark of LG Corp.

OPERATION

⚠ DANGER

Do not provide power to or operate the unit if it is flooded or submerged.
There is risk of fire, electric shock, resulting in physical injury or death.

Use a dedicated power source for this product.
There is risk of fire, electric shock, resulting in physical injury or death.

Do not operate the disconnect switch with wet hands.
There is risk of fire, electric shock, resulting in physical injury or death.

Periodically verify the hanging bolts and other hardware securing the unit have not deteriorated.
If the unit falls from its installed location, it will cause property damage, product failure,resulting in physical injury or death.

If refrigerant gas leaks out, ventilate the area before operating the unit.
If the unit is mounted in an enclosed, low-lying, or poorly ventilated area and the system develops a refrigerant leak, it will cause fire, electric shock, explosion, resulting in physical injury or death.

⚠ WARNING

Do not allow water, dirt, or animals to enter the unit.
There is risk of fire, electric shock, resulting in physical injury or death.

Do not touch refrigerant piping during or after operation.
It can cause burns or frostbite.

Do not operate the unit with the panel(s) or protective cover(s) removed; keep fingers and clothing away from moving parts.
The rotating, hot, cold, and high-voltage parts of the unit can cause physical injury or death.

Periodically check power cable and connection for damage.
Cable must be replaced by the manufacturer, its service agent, or similar qualified persons in order to avoid physical injury and / or electric shock.

Securely attach the electrical cover to the unit.
Non-secured electrical covers can result in burns or electric shock due to dust or water in the service panel.

Ensure no power is connected to the unit other than as directed in this manual. Remove power from the unit before removing or servicing the unit.
There is risk of unit failure, fire, electric shock, resulting in physical injury or death.

⚠ CAUTION

To avoid physical injury, use caution when cleaning or servicing the unit.

⚠ NOTE

Clean up the site after installation is finished, and check that no metal scraps, screws, or bits of wiring have been left inside or surrounding the unit.

Do not use this equipment in mission critical or special-purpose applications such as preserving foods, works of art, wine coolers or refrigeration.

Provide power to the compressor crankcase heaters to application outdoor units at least six (6) hours before operation begins.
Starting operation with a cold compressor sump(s) may result in severe bearing damage to the compressor(s). Keep the power switch on during the operational season.

Do not operate the unit with the panel(s) or protective cover(s) removed; keep fingers and clothing away from moving parts.
Non-secured covers can result in equipment malfunction due to dust or water.

Do not block the inlet or outlet.
Unit may malfunction.

Securely attach the electrical cover to the unit.
Non-secured covers can result in fire due to dust or water in the service panel.

Periodically verify the equipment mounting hardware has not deteriorated.
If the base collapses, the unit could fall and cause property damage or product failure.

Do not allow water, dirt, or animals to enter the unit.
There is risk of unit failure.

Do not turn off the main power switch after operation has been stopped.
Wait at least five (5) minutes before turning off the main power switch, otherwise it will result in product malfunction.

Due to our policy of continuous product innovation, some specifications may change without notification.
©LG Electronics U.S.A., Inc., Englewood Cliffs, NJ. All rights reserved. "LG" is a registered trademark of LG Corp.

UNIT NOMENCLATURE

ARN	D	20	3	DC	R	4

Family
ARN = Multi V Indoor Unit
R410A Refrigerant

Type
D = Dedicated Outdoor Air System (DOAS)

Air Flow Rate (CFM)
06 = 600 CFM
90 = 900 CFM
15 = 1,500 CFM
20 = 2,000 CFM

Electrical Ratings
3 = 208-220V, 60Hz, 1 Phase

Chassis
DE = Type E (Compact DOAS)
DC = Type C (Compact DOAS)

Energy Recovery Wheel
R = Without Energy Recovery Wheel

Generation
4 = Fourth

Due to our policy of continuous product innovation, some specifications may change without notification.
©LG Electronics U.S.A., Inc., Englewood Cliffs, NJ. All rights reserved. "LG" is a registered trademark of LG Corp.

ARND203DCR4, ARND153DCR4

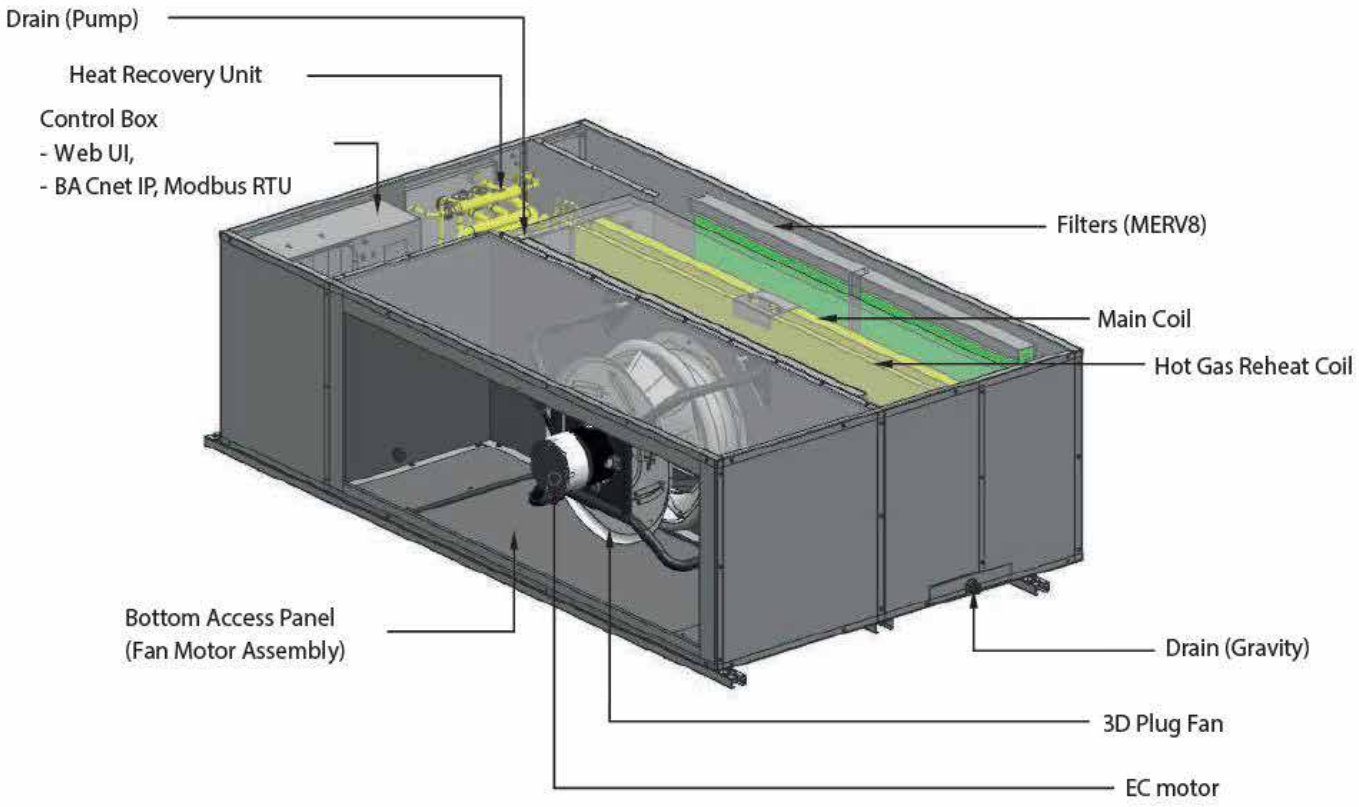

ARND093DCR4

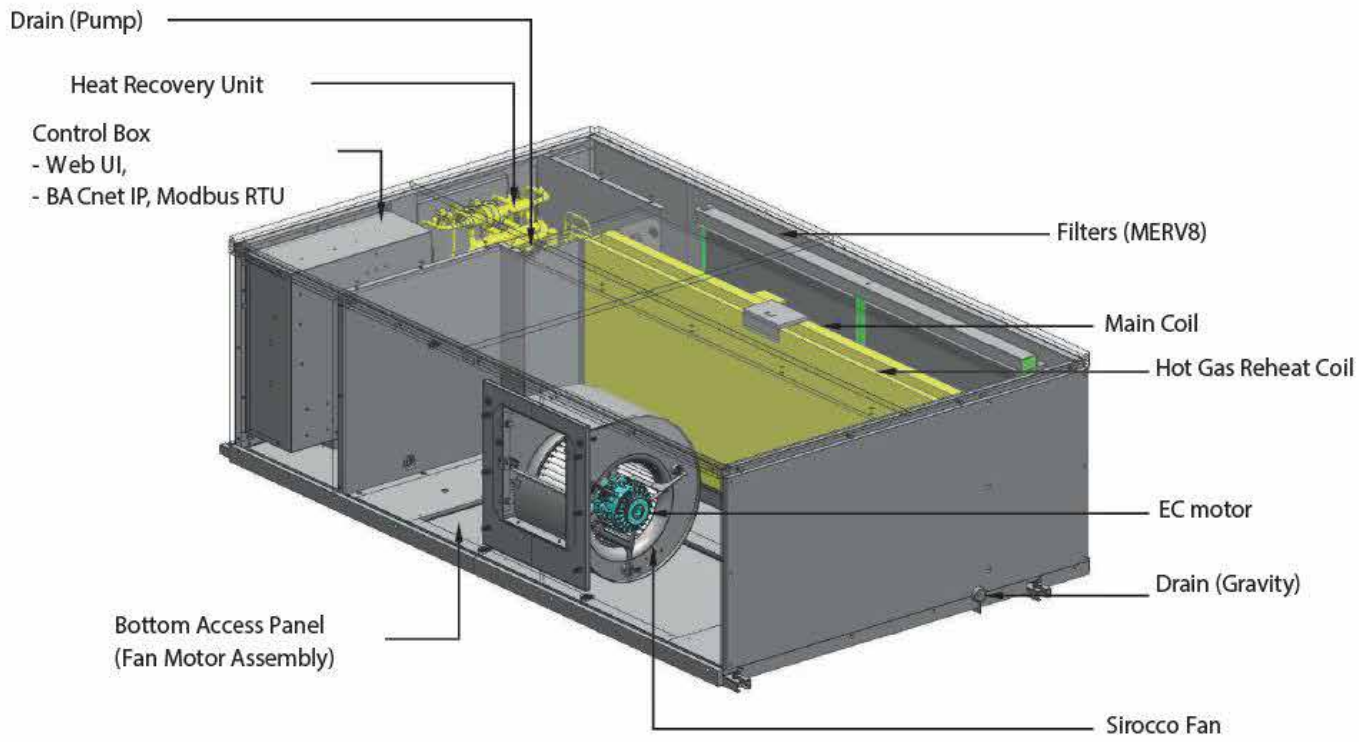

Due to our policy of continuous product innovation, some specifications may change without notification.
©LG Electronics U.S.A., Inc., Englewood Cliffs, NJ. All rights reserved. "LG" is a registered trademark of LG Corp.

PRODUCT OVERVIEW

Interior Components

ARND063DER4

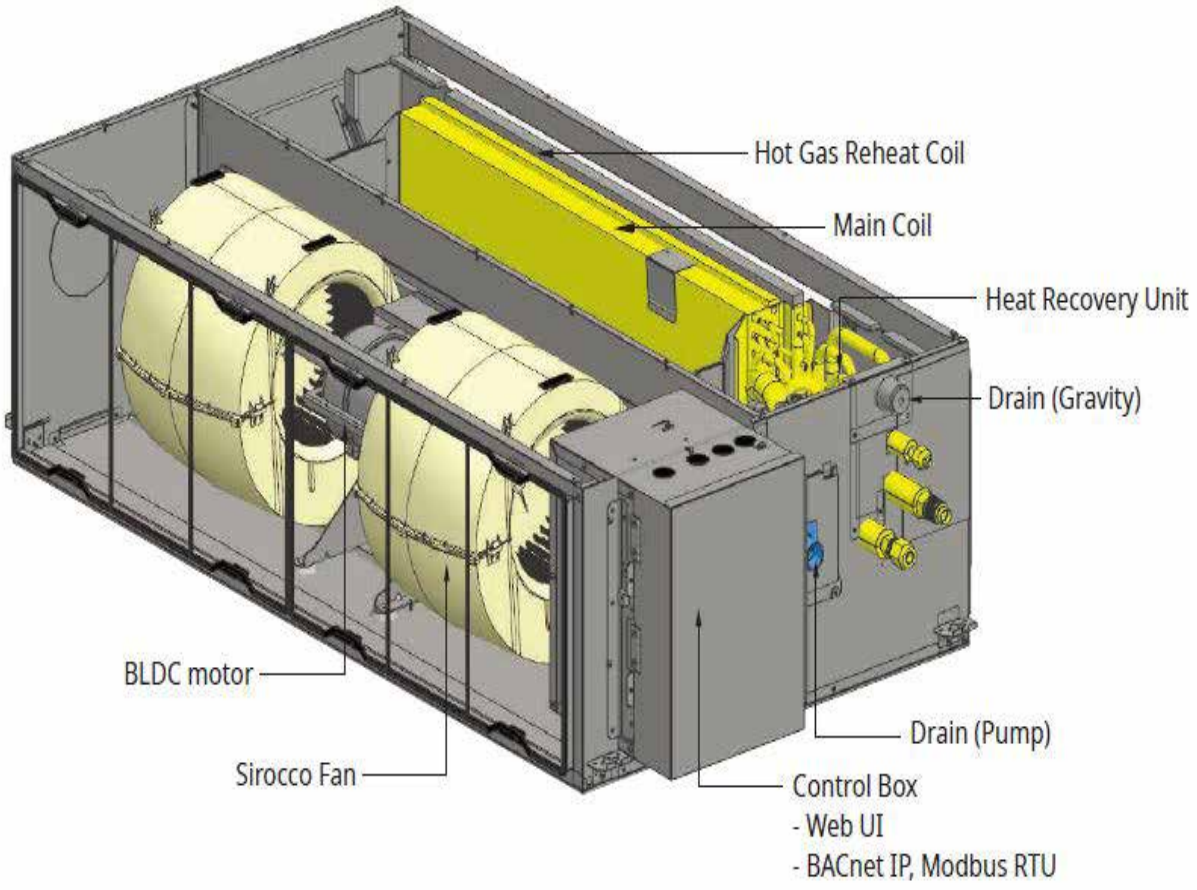

Due to our policy of continuous product innovation, some specifications may change without notification.
©LG Electronics U.S.A., Inc., Englewood Cliffs, NJ. All rights reserved. "LG" is a registered trademark of LG Corp.

ARND203DCR4, ARND153DCR4

Top Layer

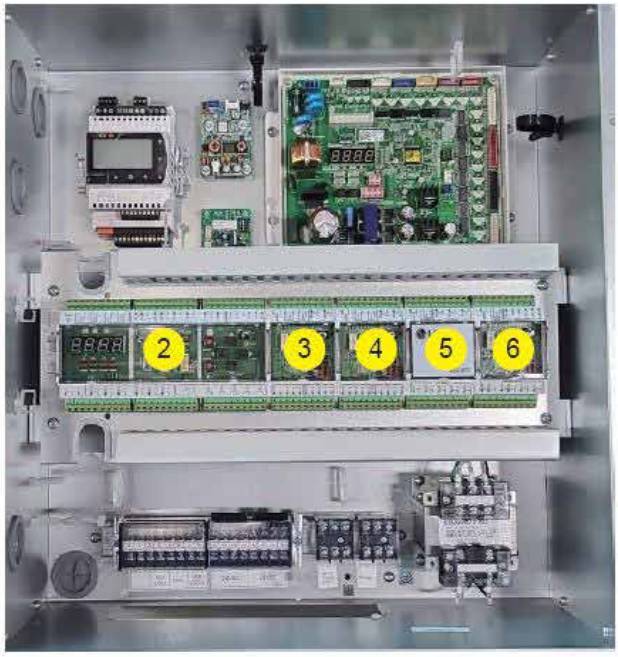

Bottom Layer

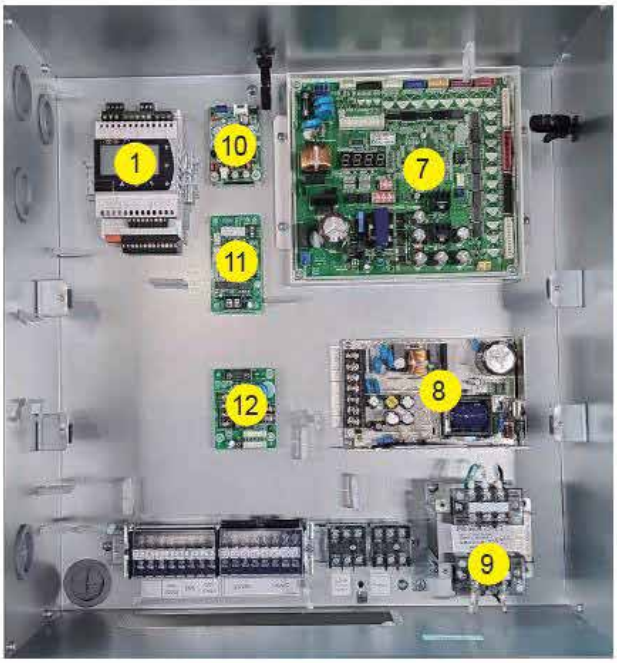

Table 1: Electrical Components Legend.

Electrical Component No.	Description
1	CAREL® Controller
2	Main Module
3	Main Coil EEV Module
4	Reheat Coil EEV Module
5	NTC Module
6	UI Module
7	HR Unit PCB
8	SMPS
9	Transformer
10	RS-485 1
11	RS-485 2
12	Relay 1

The CAREL® name and logo are registered trademarks and distinctive marks of CAREL INDUSTRIES S.p.A.

Due to our policy of continuous product innovation, some specifications may change without notification.
©LG Electronics U.S.A., Inc., Englewood Cliffs, NJ. All rights reserved. "LG" is a registered trademark of LG Corp.

PRODUCT OVERVIEW

Electrical Components

ARND093DCR4

Top Layer

Bottom Layer

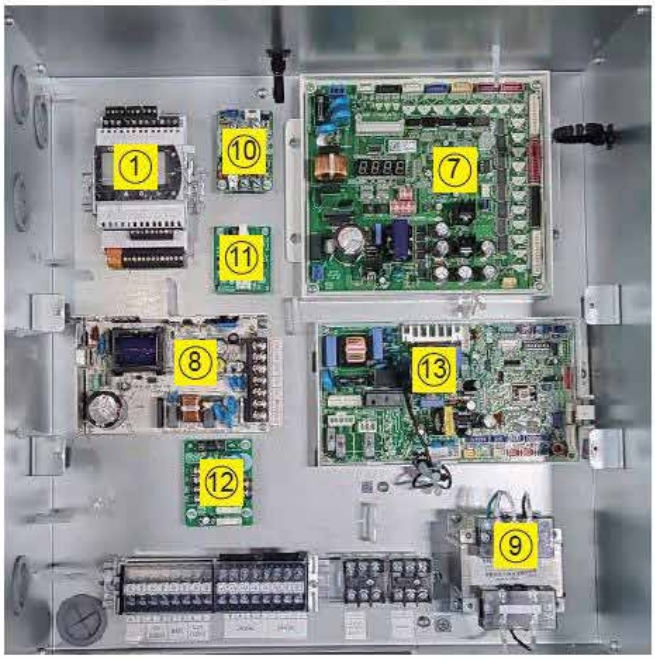

Table 2: Electrical Components Legend.

Electrical Component No.	Description
1	CAREL® Controller
2	Main Module
3	UI Module
4	NTC Module
5	Main Coil EEV Module
6	Reheat Coil EEV Module
7	Heat Recovery Unit PCB
8	SMPS
9	Transformer
10	RS-485 1
11	RS-485 2
12	Relay
13	Motor PCB

The CAREL® name and logo are registered trademarks and distinctive marks of CAREL INDUSTRIES S.p.A.

Note:

Actual discharge air temperatures may vary from discharge air temperature set-point due to changes in outdoor air processing loads.

Due to our policy of continuous product innovation, some specifications may change without notification.
©LG Electronics U.S.A., Inc., Englewood Cliffs, NJ. All rights reserved. "LG" is a registered trademark of LG Corp.

ARND063DER4

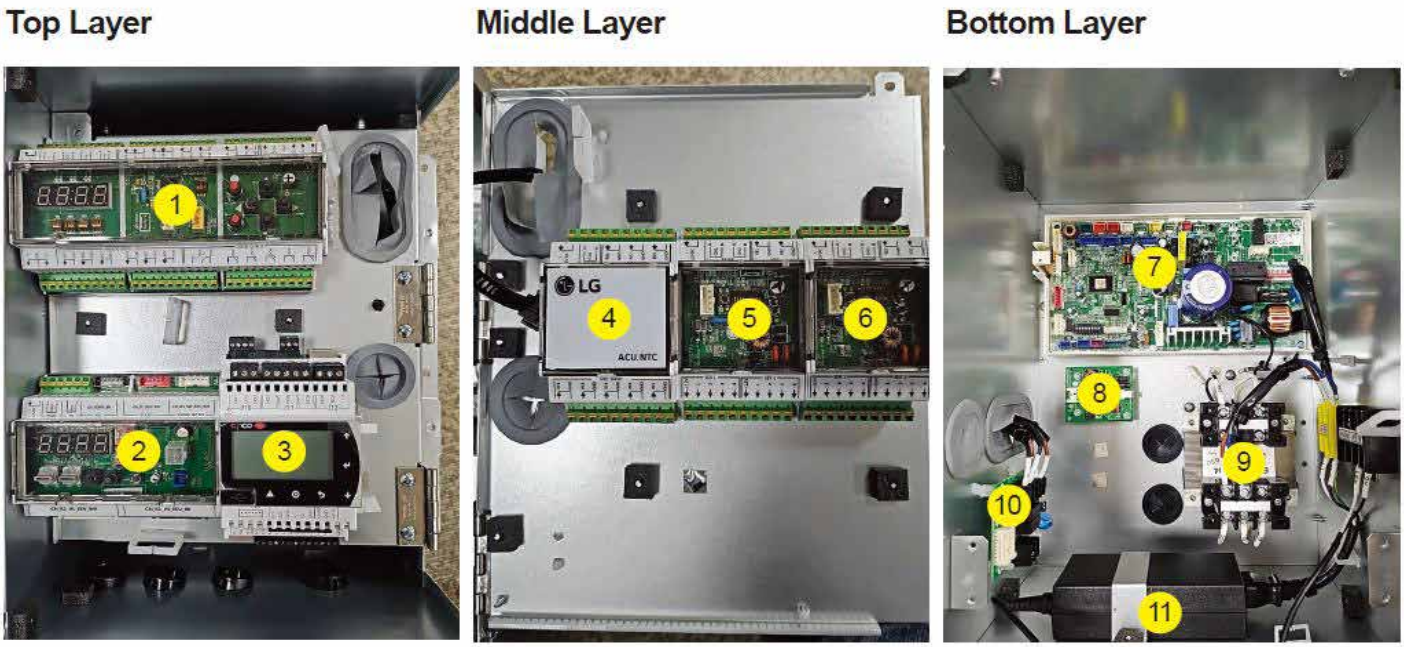

Table 3: Electrical Components Legend.

Electrical Component No.	Description
1	Main Module
2	HR Unit Module
3	CAREL® Controller
4	NTC Module
5	Main Coil EEV Module
6	Reheat Coil EEV Module
7	Motor PCB
8	RS-485
9	Transformer
10	Relay
11	Adapter

The CAREL® name and logo are registered trademarks and distinctive marks of CAREL INDUSTRIES S.p.A.

Due to our policy of continuous product innovation, some specifications may change without notification.
©LG Electronics U.S.A., Inc., Englewood Cliffs, NJ. All rights reserved. "LG" is a registered trademark of LG Corp.

GENERAL DATA

Specifications

Table 4: Split Compact DOAS General Data.

Unit Model No.		ARND063DER4	ARND093DCR4	ARND153DCR4	ARND203DCR4
Cooling Mode Performance					
Total Cooling Capacity (Btu/h)		42,000	70,000	120,000	143,100
Hot Gas Reheat Capacity (Btu/h)		10,000	13,000	24,000	30,000
Moisture Removal Capacity (lb. / h)		21	33.0	55.0	67
Heating Mode Performance					
Capacity (Btu/h) (Main Coil)		30,000	40,000	51,000	59,900
Entering Air					
Cooling Maximum (°F, D.B. / W.B.)		122 / 80	122 / 80	122 / 80	122 / 80
Heating Minimum (°F, D.B.)		14	14	14	14
Unit Data					
Refrigerant Type[1]		R410A	R410A	R410A	R410A
Refrigerant Control		EEV	EEV	EEV	EEV
Sound Power dB(A)[2]		55	60	74	72
Net Unit Weight (lbs.)		110	342	390	390
Shipping Weight (lbs.)		126	393	448	448
Communication Cable[3] (No. x AWG)		2 (2 conductor) x 18	2 (2 conductor) x 18	2 (2 conductor) x 18	2 (2 conductor) x 18
Fan					
Type		Sirocco	Sirocco	3D Plug	3D Plug
Motor (HP / W)		0.66 / 500	0.33 / 250	1 / 750	1 / 750
Motor / Drive		BLDC/Direct	ECM / Direct	ECM / Direct	ECM / Direct
Airflow Rate (CFM)		600	900	1,500	2,000
External Static Pressure (in. w.g.)		1.0	1.0	2.0	1.5
Airflow Range (CFM)		300-600	500-900	1,000 – 1,500	1,500 – 2,000
Piping					
Liquid Connection Size (in., O.D.)		3/8 Brazed	3/8 Brazed	1/2 Brazed	1/2 Brazed
High Press. Vapor Conn. Size (in., O.D.)		5/8 Brazed	5/8 Brazed	3/4 Brazed	7/8 Brazed
Low Press. Vapor Conn. Size (in., O.D.)		5/8 Brazed	3/4 Brazed	1-1/8 Brazed	1-1/8 Brazed
Condensate Drain (in.)	**Drain Pump (in., I.D.)**	1	1	1	1
	Gravity (in.,O.D.)	1	1	1	1
Filter					
Outdoor		Cleanable (13-1/4" x 23-15/16" x 3/16")	2" Merv 8 (25" x 20")	2″ Merv 8 (25″ x 20″)	2" Merv 8 (25" x 20")

EEV - Electronic Expansion Valve

ECM - Electronically Commutated Motor

Power Supply (V/Hz/Ø): 208-230/60/1

Power wiring is field supplied and must comply with the applicable local and national codes.

This data is rated 0 ft. above sea level, with 25 ft. of refrigerant piping per coil.

Main Coil Cooling Capacity Rating obtained with entering air of 95°F D.B. / 75°F W.B. and leaving air of 52.9°F D.B. / 52.5°F W.B.

Main Coil Heating Capacity Rating obtained with entering air of 44°F D.B. and leaving air of 70°F D.B.

Reheat Coil Heating Capacity Rating obtained with entering air of 54°F D.B. and leaving air of 75°F D.B.

[1]Take appropriate actions at the end of HVAC equipment life to recover, recycle, reclaim or destroy R410A refrigerant according to applicable regulations (40 CFR Part 82, Subpart F) under section 608 of CAA.

[2]Sound power levels are tested under AHRI 260 Standard.

[3]All communication cable from the outdoor unit to the DOAS unit is to be minimum 18 AWG, 2 (2 conductor), twisted, stranded, shielded and must comply with applicable local and national codes. Ensure the communication cable is properly grounded at the outdoor unit only. ⃠ Do not ground the outdoor unit -DOAS unit communication cable at any other point.

Due to our policy of continuous product innovation, some specifications may change without notification.
©LG Electronics U.S.A., Inc., Englewood Cliffs, NJ. All rights reserved. "LG" is a registered trademark of LG Corp.

Table 5: Split Compact DOAS Electrical Data

Model	Power Supply				FLA	MCA	MOP
	Hz	Volts	Voltage Range	Phase			
ARND093DCR4	60	208-230	187-253	1	2.0	2.5	15
ARND153DCR4					5.8	7.3	15
ARND203DCR4					6.0	7.5	15
ARND063DER4					2.5	3.1	15

MCA : Minimum Circuit Ampacity.

MOP : Maximum Overcurrent Protection: (Largest motor FLA x 2.25) + (Sum of other motor FLA) rounded down to the nearest standard fuse size.

Due to our policy of continuous product innovation, some specifications may change without notification.
©LG Electronics U.S.A., Inc., Englewood Cliffs, NJ. All rights reserved. “LG” is a registered trademark of LG Corp.

GENERAL DATA

ARND063DER4 External Dimensions

ARND063DER4

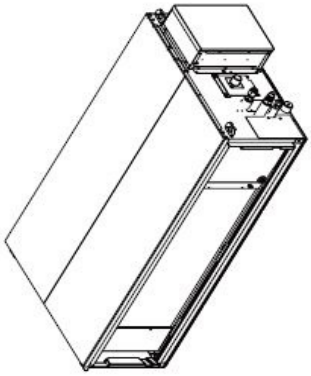

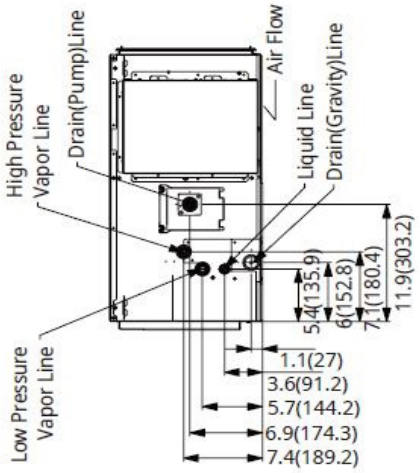

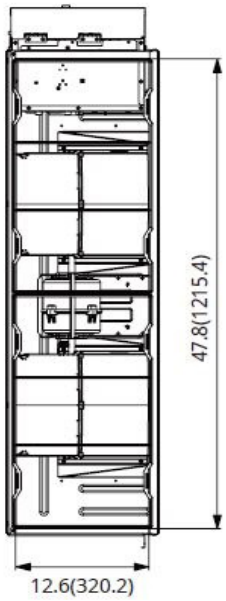

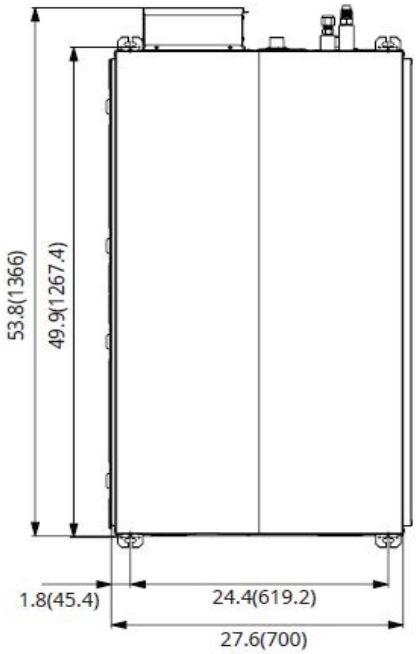

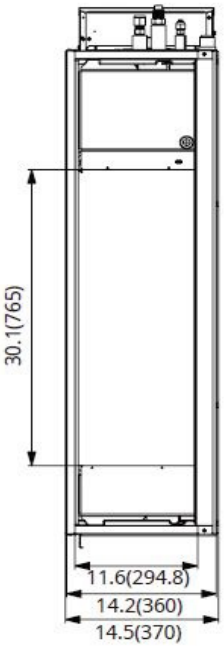

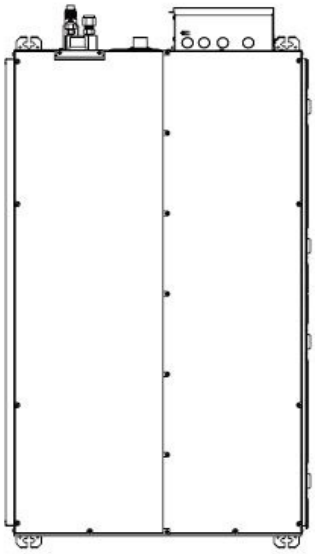

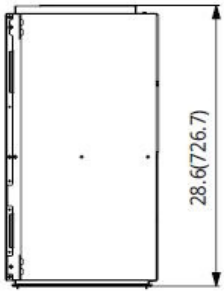

Due to our policy of continuous product innovation, some specifications may change without notification.
©LG Electronics U.S.A., Inc., Englewood Cliffs, NJ. All rights reserved. "LG" is a registered trademark of LG Corp.

ARND093DCR4 External Dimensions

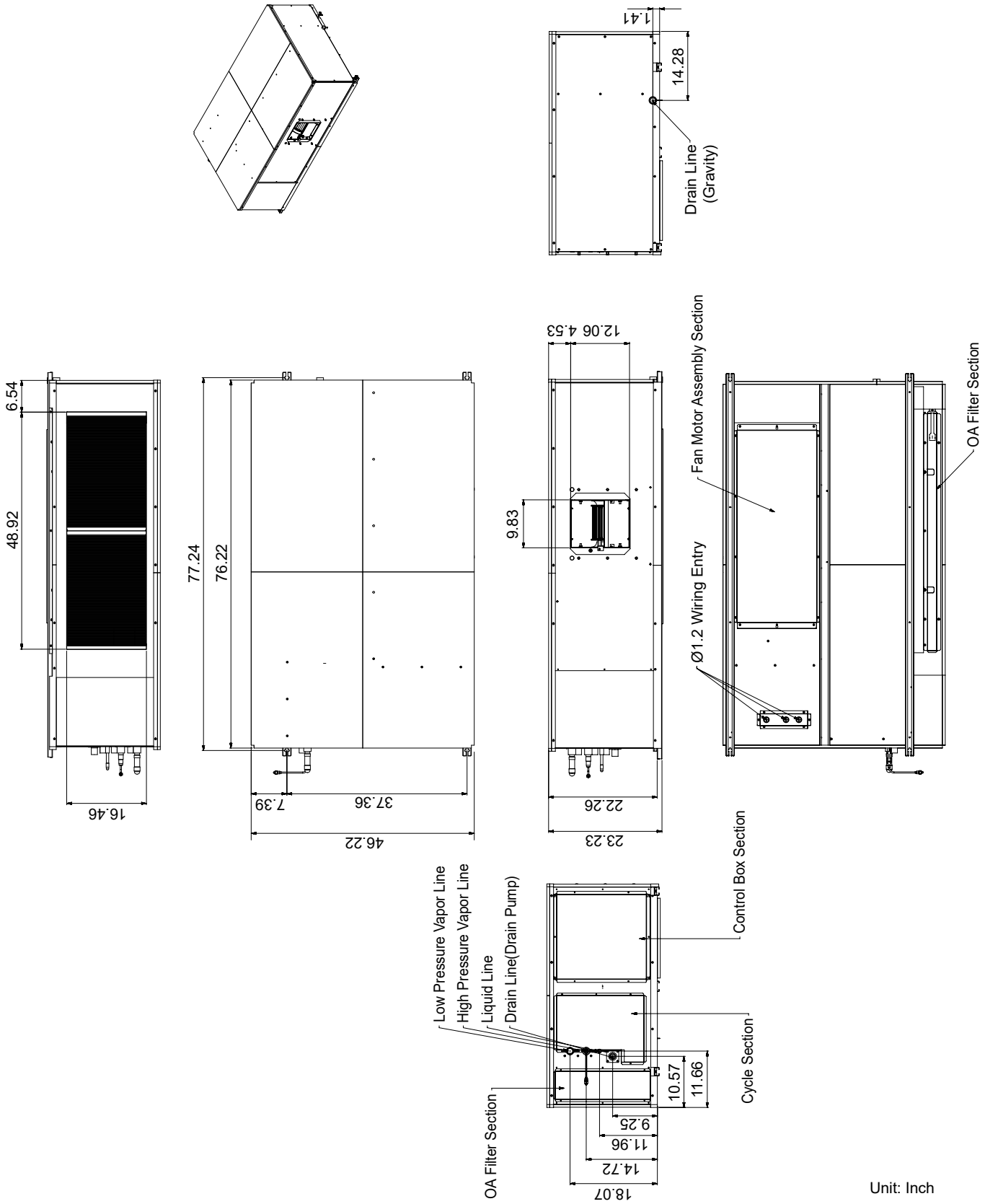

Due to our policy of continuous product innovation, some specifications may change without notification.
©LG Electronics U.S.A., Inc., Englewood Cliffs, NJ. All rights reserved. "LG" is a registered trademark of LG Corp.

GENERAL DATA

ARND153DCR4, ARND203DCR4 External Dimensions

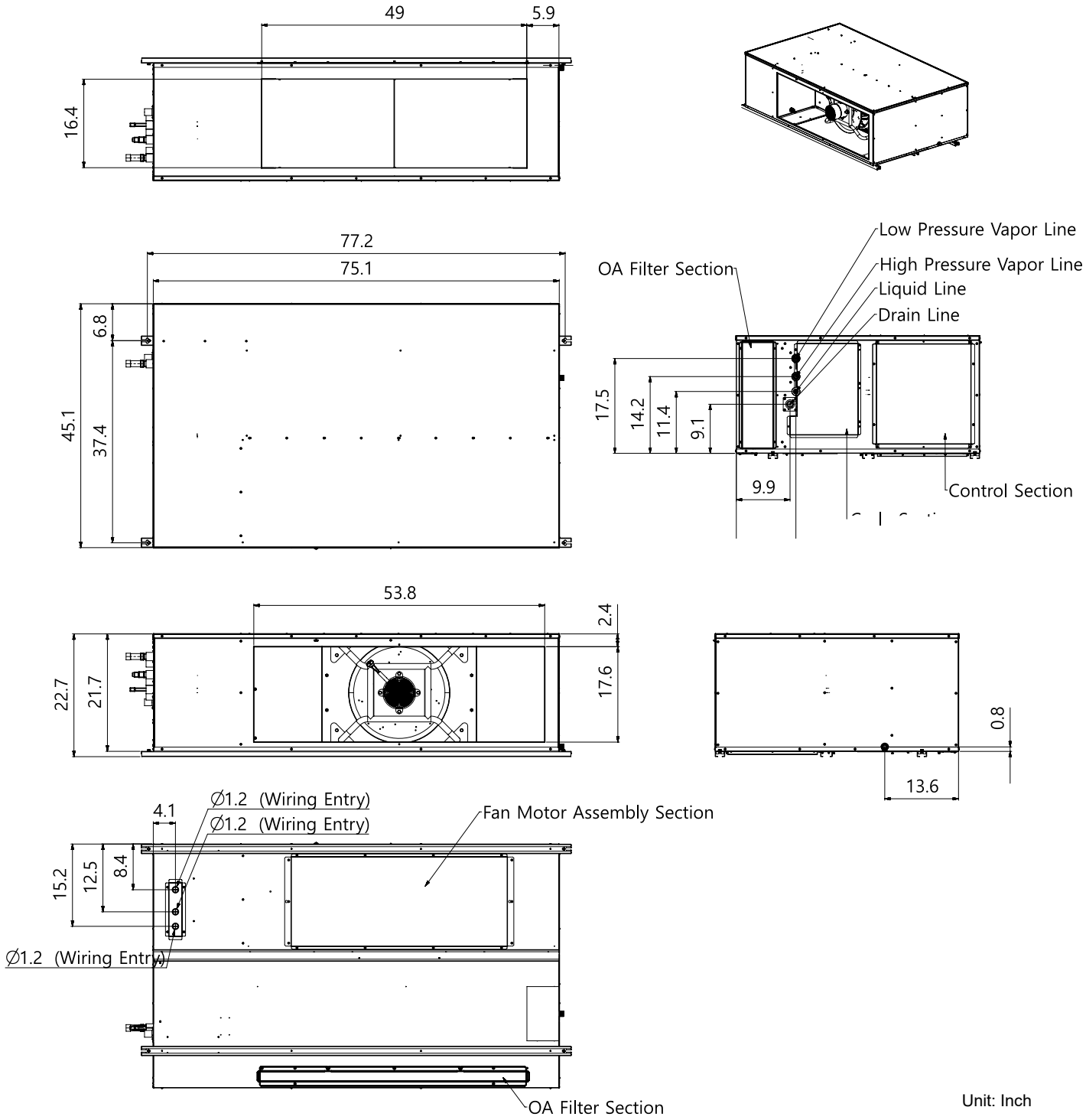

Unit: Inch

Due to our policy of continuous product innovation, some specifications may change without notification.
©LG Electronics U.S.A., Inc., Englewood Cliffs, NJ. All rights reserved. "LG" is a registered trademark of LG Corp.

Figure 1: ARND063DER4 Wiring Diagram.

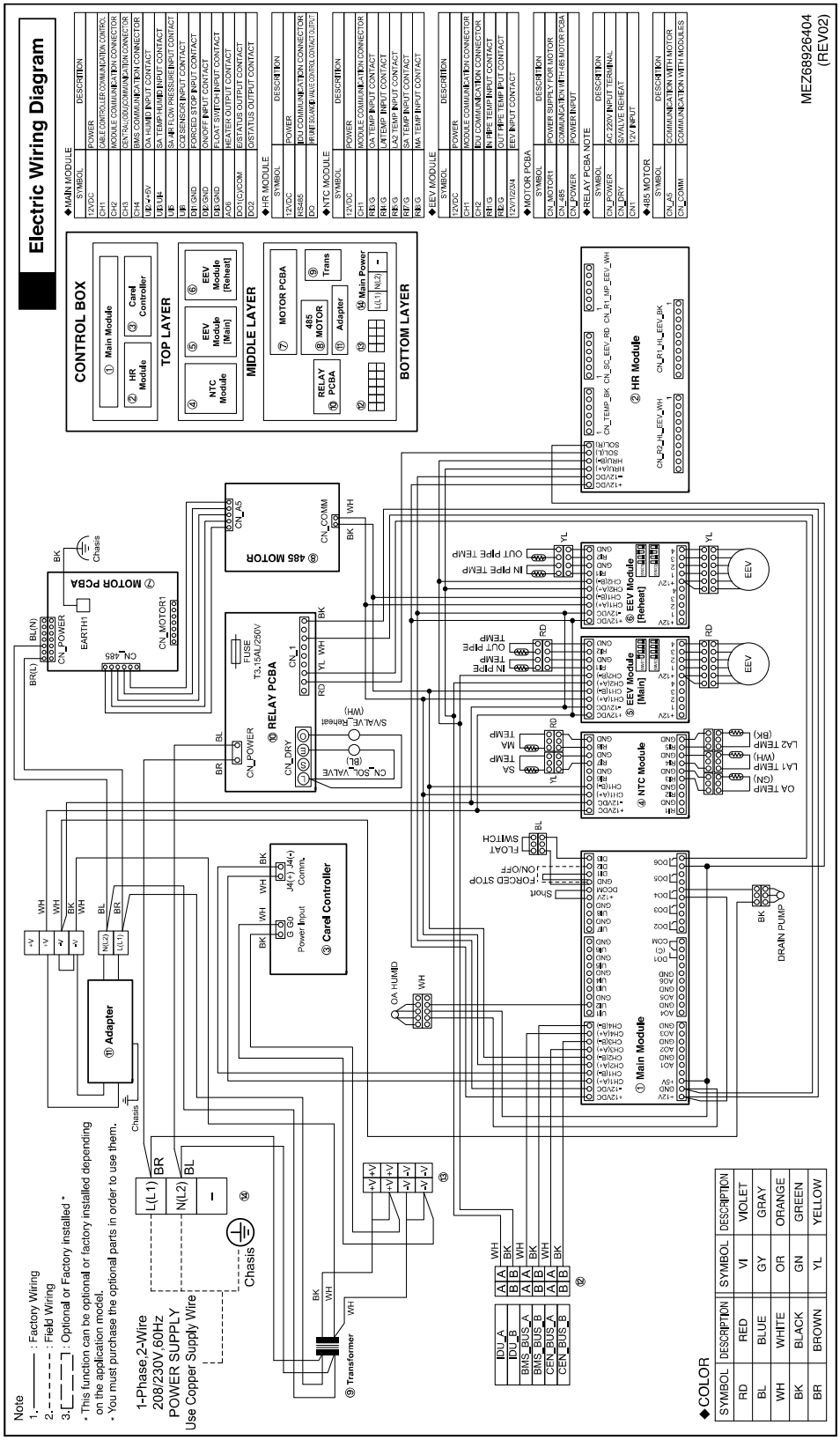

©LG Electronics U.S.A., Inc., Englewood Cliffs, NJ. All rights reserved. "LG" is a registered trademark of LG Corp.

GENERAL DATA

Wiring

Figure 2: ARND093DCR4 Wiring Diagram.

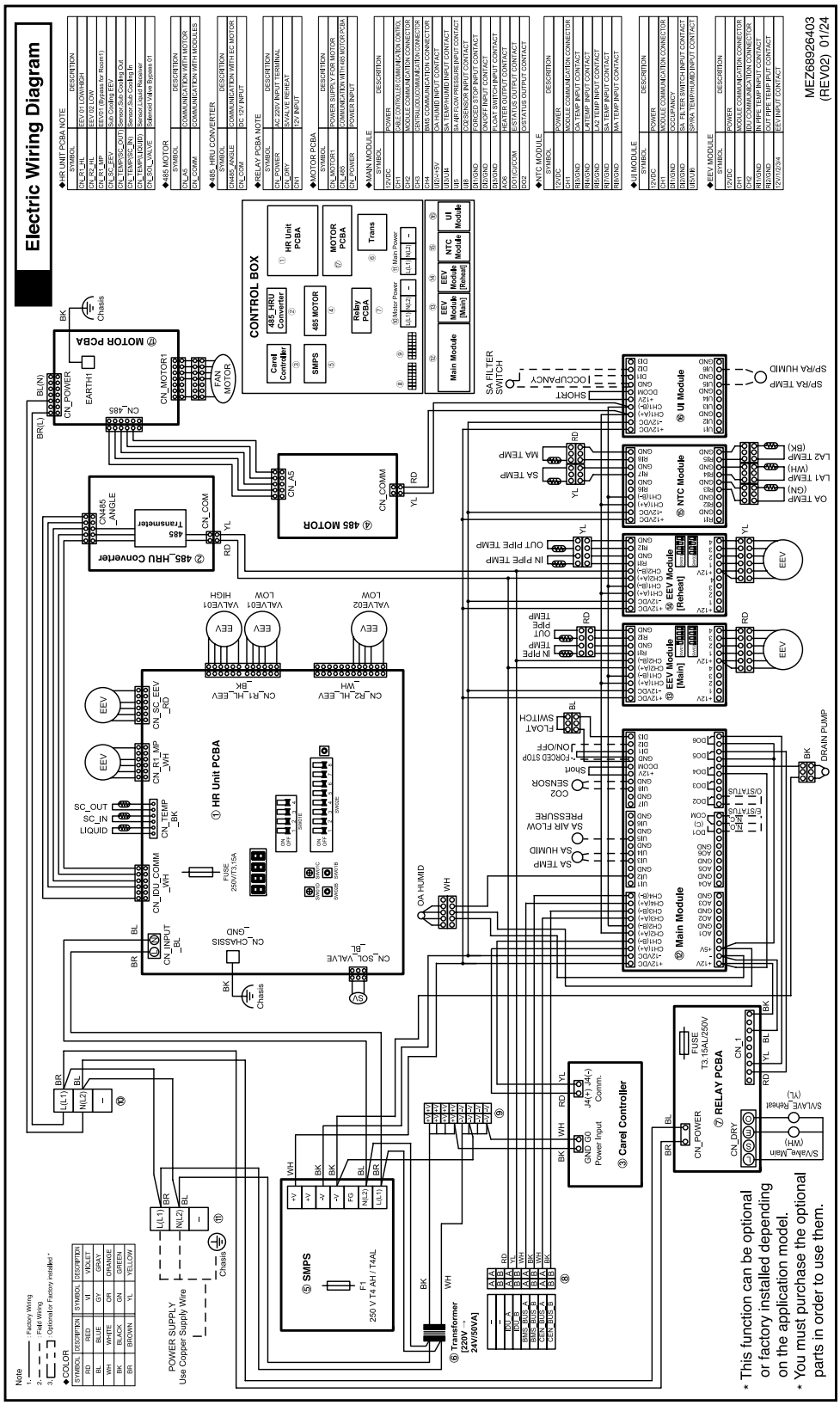

Due to our policy of continuous product innovation, some specifications may change without notification.
©LG Electronics U.S.A., Inc., Englewood Cliffs, NJ. All rights reserved. "LG" is a registered trademark of LG Corp.

Figure 3: ARND153DCR4, ARND203DCR4 Wiring Diagram.

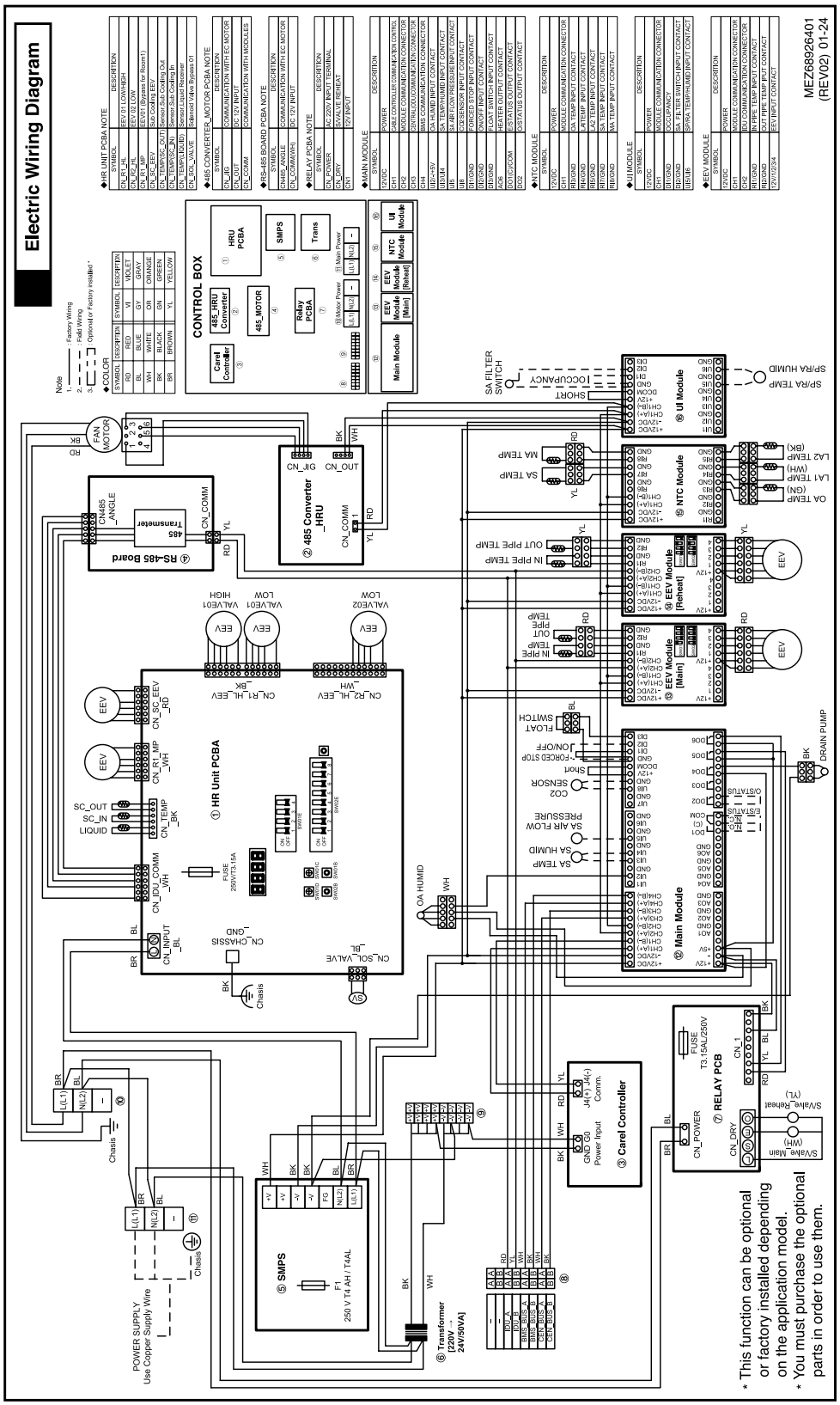

©LG Electronics U.S.A., Inc., Englewood Cliffs, NJ. All rights reserved. "LG" is a registered trademark of LG Corp.

GENERAL DATA

Refrigerant Flow - Cooling

Figure 4: ARND093DCR4, ARND153DCR4, and ARND203DCR4 Refrigerant Piping Diagram (Cooling)

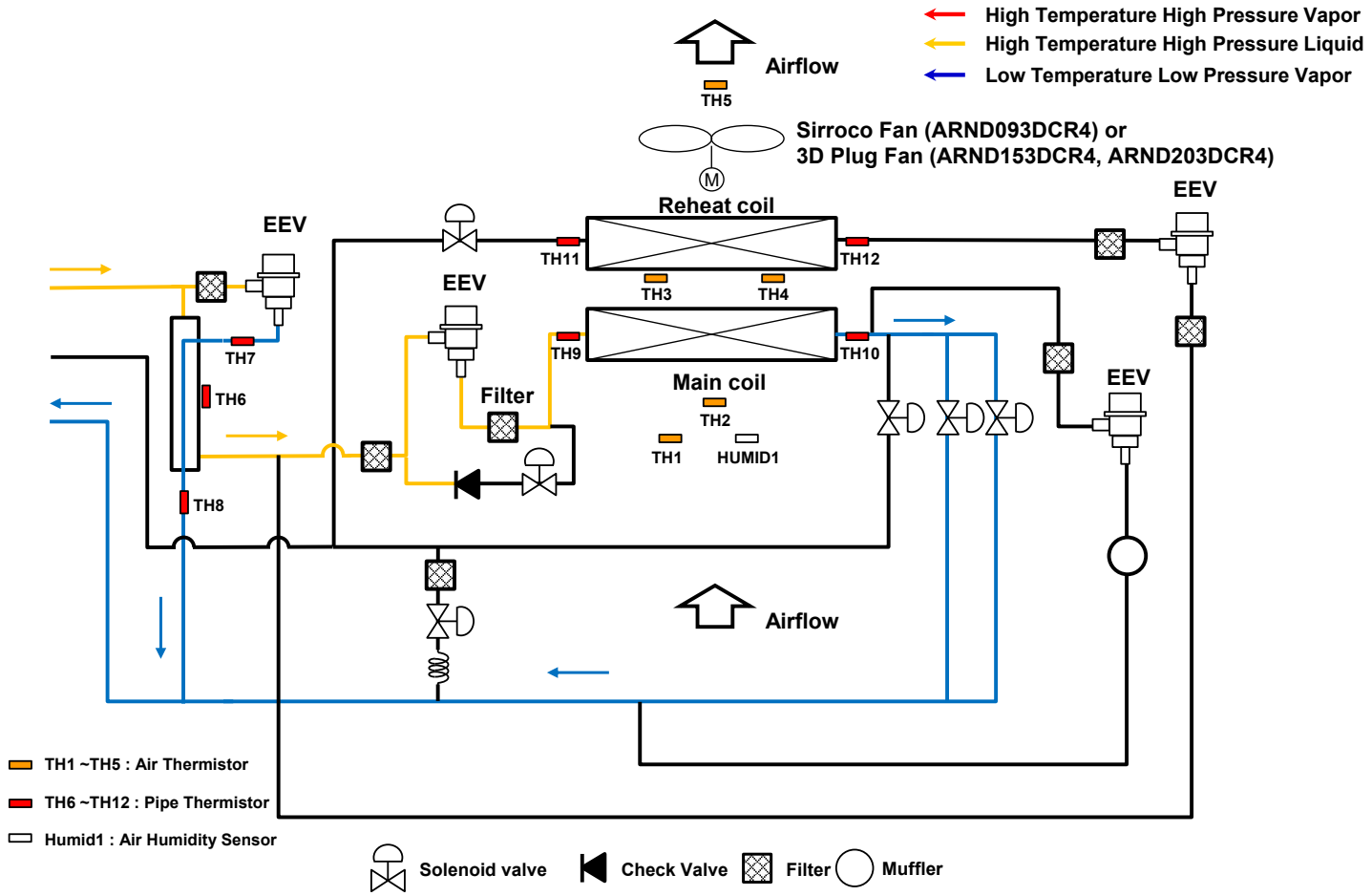

Table 6: ARND093DCR4, ARND153DCR4, and ARND203DCR4 Refrigerant Pipe Connection Port Diameters.

Model	Liquid (in., O.D.)	High Pressure Vapor (in., O.D.)	Low Pressure Vapor Size (in., O.D.)
ARND093DCR4	3/8 Brazed	5/8 Brazed	3/4 Brazed
ARND153DCR4	1/2 Brazed	3/4 Brazed	1-1/8 Brazed
ARND203DCR4	1/2 Brazed	7/8 Brazed	1-1/8 Brazed

Table 7: ARND093DCR4, ARND153DCR4, and ARND203DCR4 Thermistors.

Thermistor	Type	Description
TH1	Air	Outdoor Air Thermistor
TH2	Air	Mixed Air Thermistor (After E/Heater)
TH3	Air	Main Coil 1 Thermistor
TH4	Air	Main Coil 2 Thermistor
TH5	Air	Supply Air Thermistor
TH6	Pipe	Liquid Pipe Thermistor
TH7	Pipe	SC In Thermistor
TH8	Pipe	SC Out Thermistor
TH9	Pipe	Main Coil In Thermistor
TH10	Pipe	Main Coil Out Thermistor
TH11	Pipe	Reheat Coil In Thermistor
TH12	Pipe	Reheat Coil Out Thermistor
Humid1	-	Outdoor Air Humidity Sensor

Due to our policy of continuous product innovation, some specifications may change without notification.
©LG Electronics U.S.A., Inc., Englewood Cliffs, NJ. All rights reserved. "LG" is a registered trademark of LG Corp.

Figure 5: ARND093DCR4, ARND153DCR4, and ARND203DCR4 Refrigerant Piping Diagram (Dehumidification).

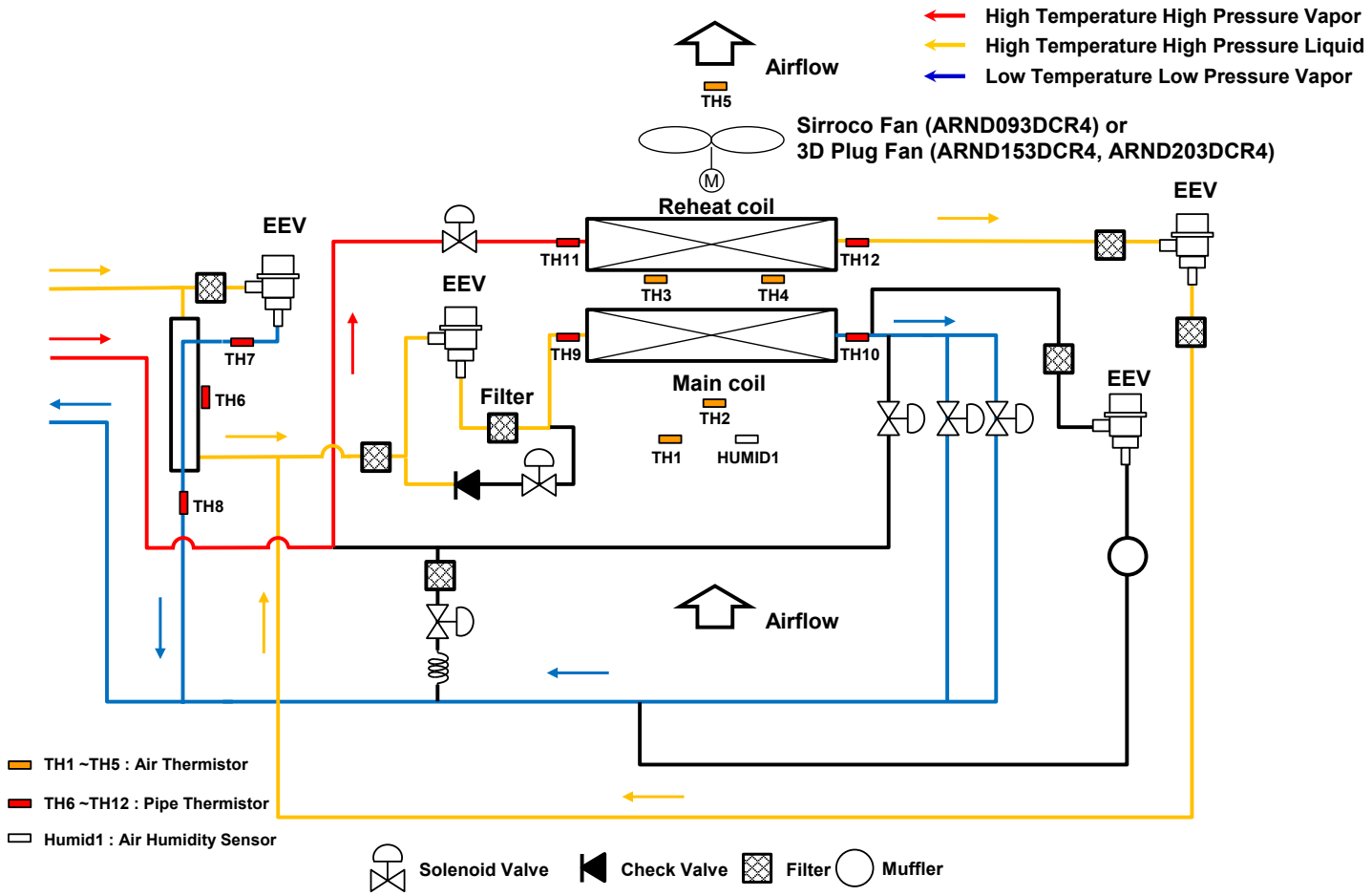

Table 8: ARND093DCR4, ARND153DCR4, and ARND203DCR4 Refrigerant Pipe Connection Port Diameters.

Model	Liquid (in., O.D.)	High Pressure Vapor (in., O.D.)	Low Pressure Vapor Size (in., O.D.)
ARND093DCR4	3/8 Brazed	5/8 Brazed	3/4 Brazed
ARND153DCR4	1/2 Brazed	3/4 Brazed	1-1/8 Brazed
ARND203DCR4	1/2 Brazed	7/8 Brazed	1-1/8 Brazed

Table 9: ARND093DCR4, ARND153DCR4, and ARND203DCR4 Thermistors.

Thermistor	Type	Description
TH1	Air	Outdoor Air Thermistor
TH2	Air	Mixed Air Thermistor (After E/Heater)
TH3	Air	Main Coil 1 Thermistor
TH4	Air	Main Coil 2 Thermistor
TH5	Air	Supply Air Thermistor
TH6	Pipe	Liquid Pipe Thermistor
TH7	Pipe	SC In Thermistor
TH8	Pipe	SC Out Thermistor
TH9	Pipe	Main Coil In Thermistor
TH10	Pipe	Main Coil Out Thermistor
TH11	Pipe	Reheat Coil In Thermistor
TH12	Pipe	Reheat Coil Out Thermistor
Humid1	-	Outdoor Air Humidity Sensor

Due to our policy of continuous product innovation, some specifications may change without notification.
©LG Electronics U.S.A., Inc., Englewood Cliffs, NJ. All rights reserved. "LG" is a registered trademark of LG Corp.

GENERAL DATA

Refrigerant Flow - Heating

Figure 6: ARND093DCR4, ARND153DCR4, and ARND203DCR4 Refrigerant Piping Diagram (Heating).

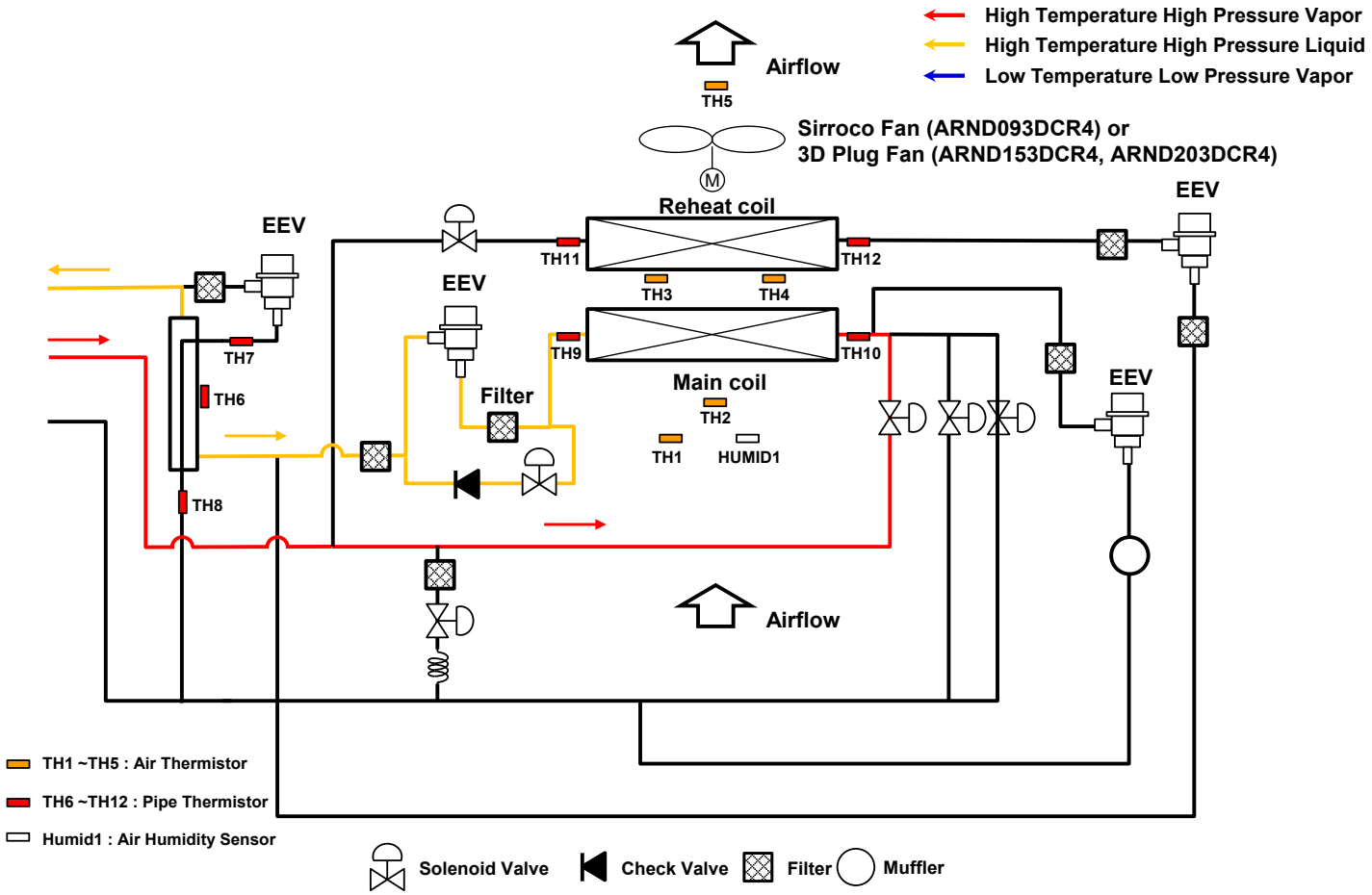

Table 10: ARND093DCR4, ARND153DCR4, and ARND203DCR4 Refrigerant Pipe Connection Port Diameters.

Model	Liquid (in., O.D.)	High Pressure Vapor (in., O.D.)	Low Pressure Vapor Size (in., O.D.)
ARND093DCR4	3/8 Brazed	5/8 Brazed	3/4 Brazed
ARND153DCR4	1/2 Brazed	3/4 Brazed	1-1/8 Brazed
ARND203DCR4	1/2 Brazed	7/8 Brazed	1-1/8 Brazed

Table 11: ARND093DCR4, ARND153DCR4, and ARND203DCR4 Thermistors.

Thermistor	Type	Description
TH1	Air	Outdoor Air Thermistor
TH2	Air	Mixed Air Thermistor (After E/Heater)
TH3	Air	Main Coil 1 Thermistor
TH4	Air	Main Coil 2 Thermistor
TH5	Air	Supply Air Thermistor
TH6	Pipe	Liquid Pipe Thermistor
TH7	Pipe	SC In Thermistor
TH8	Pipe	SC Out Thermistor
TH9	Pipe	Main Coil In Thermistor
TH10	Pipe	Main Coil Out Thermistor
TH11	Pipe	Reheat Coil In Thermistor
TH12	Pipe	Reheat Coil Out Thermistor
Humid1	-	Outdoor Air Humidity Sensor

Due to our policy of continuous product innovation, some specifications may change without notification.
©LG Electronics U.S.A., Inc., Englewood Cliffs, NJ. All rights reserved. "LG" is a registered trademark of LG Corp.

Sound Power Levels

Table 12: . ARND063DER4 600 CFM Sound Power Data (@ 0.85ESP)

Model	Rating	E.S.P	CFM	Sound Power Level, Lw (dB one reference picowatt)							
				63Hz	125Hz	250Hz	500Hz	1kHz	2kHz	4kHz	8kHz
ARND063DER4	Ducted Inlet	0.85	600	41.2	50.2	53.5	54.1	51.1	53.5	49.1	41.2
	Casing Radiated			43.9	49.1	55.9	60.2	65.9	57.7	50.1	42.8
	Ducted Outlet			42.3	53.5	55.6	62.6	65.7	66.1	51.5	47.1

Table 13: . ARND093DCR4 500 CFM Sound Power Data (@0.2 ESP)

Model	Rating	E.S.P	CFM	Sound Power Level, Lw (dB one reference picowatt)							
				63Hz	125Hz	250Hz	500Hz	1kHz	2kHz	4kHz	8kHz
ARND093DCR4	Ducted Inlet	0.2	500	39.8	47.5	51.7	57.6	56.8	51.9	45.2	32.5
	Casing Radiated			33.5	35.8	40.9	50.0	47.2	43.8	36.3	25.8
	Ducted Outlet			55.5	51.6	54.2	59.0	57.6	54.0	48.5	37.1

Table 14: . ARND093DCR4 900 CFM Sound Power Data (@0.64 ESP)

Model	Rating	E.S.P	CFM	Sound Power Level, Lw (dB one reference picowatt)							
				63Hz	125Hz	250Hz	500Hz	1kHz	2kHz	4kHz	8kHz
ARND093DCR4	Ducted Inlet	0.64	900	43.6	48.2	54.7	58.9	60.0	55.4	48.5	36.3
	Casing Radiated			36.2	40.6	43.8	50.0	51.6	48.1	39.7	28.7
	Ducted Outlet			70.9	66.8	58.8	62.1	62.7	59.6	56.1	48.0

Table 15: . ARND153DCR4 and ARND203DCR4 1,200 CFM Sound Data (@0.96 ESP)

Model	Rating	E.S.P	CFM	Sound Power Level, Lw (dB one reference picowatt)							
				63Hz	125Hz	250Hz	500Hz	1kHz	2kHz	4kHz	8kHz
ARND153DCR4, ARND203DCR4	Ducted Inlet	0.96	1,211	70.9	68.2	62.4	58.8	53.9	50.9	42.5	39.5
	Casing Radiated			65.3	68.2	62.0	62.4	63.0	60.5	55.4	52.3
	Ducted Outlet			71.3	68.2	67.0	64.1	66.3	61.0	48.8	43.5

Table 16: . ARND153DCR4 1,500 CFM Sound Data (@1.96 ESP)

Model	Rating	E.S.P	CFM	Sound Power Level, Lw (dB one reference picowatt)							
				63Hz	125Hz	250Hz	500Hz	1kHz	2kHz	4kHz	8kHz
ARND153DCR4	Ducted Inlet	1.96	1,516	76.9	72.1	71.7	68.7	61.7	58.7	52.7	49.8
	Casing Radiated			76.9	79.6	71.1	69.3	69.7	67.8	65.0	63.2
	Ducted Outlet			80.3	72.6	79.5	72.6	72.9	67.5	61.2	54.5

Table 17: ARND203DCR4 2,000 CFM Sound Data (@1.5 ESP).

Model	Rating	E.S.P	CFM	Sound Power Level, Lw (dB one reference picowatt)							
				63Hz	125Hz	250Hz	500Hz	1kHz	2kHz	4kHz	8kHz
ARND203DCR4	Ducted Inlet	1.5	2,023	71.9	70.3	74.8	68.1	60.2	58.6	53.6	49.7
	Casing Radiated			73.5	73.2	70.0	67.5	67.1	65.1	63.0	59.5
	Ducted Outlet			72.5	77.3	82.9	72.7	72.3	67.4	60.5	54.7

Due to our policy of continuous product innovation, some specifications may change without notification.
©LG Electronics U.S.A., Inc., Englewood Cliffs, NJ. All rights reserved. "LG" is a registered trademark of LG Corp.

INSTALLATION

Receiving, Handling, Storage / Removing, Assemblies, Airflow Arrangement

Receiving and Inspection

Upon receiving the product, verify that all pieces listed on the bill of lading, delivery receipt, or packing list are present.

Inspect each crate or carton for shipping damage before accepting delivery. Alert the carrier if any damage is detected; ⃠ do not refuse shipment. The customer must note any damage (or shortage of items) on the delivery receipt and all copies of the bill of lading, which then should be signed by the delivery carrier. Photograph the damage if possible. If damaged, immediately contact your manufacturer's representative.

Note:

Any physical damage to the unit after acceptance is not the manufacturer's responsibility.

Handling

Handle in such a manner as to keep from scratching or chipping the unit. A damaged finish may reduce ability of unit to resist corrosion.

Storage

Units are protected against damage during shipment. If the unit cannot be installed and operated immediately, precautions need to be taken to prevent deterioration of the unit during storage. The user assumes responsibility of the unit and accessories while in storage. The manufacturer will not be responsible for damage during storage. These suggestions are provided solely as a convenience to the user.

The ideal environment for storing the units and accessories designed for indoor applications is indoors, above grade, in a low humidity atmosphere that is sealed to prevent dust, rain, or snow from entering. Units designed for outdoor applications may be stored outdoors, but all accessories must be stored indoors in a clean, dry atmosphere.

Removing from Storage

As units are removed from storage to be installed in their final location, they should be protected and maintained in a similar manner until the equipment goes into operation. Before installing the unit and system components, inspect the unit assembly to make sure it is in working order:

1. Check all fasteners, set screws on the fan, wheel, bearings, drive, motor base, and accessories for tightness.
2. Rotate the fan wheel(s) by hand to ensure parts are not in contact with one another and are causing friction / damage.

Assemblies

- Blower - One plenum-type fans (LG 3D Plug). All units are equipped with a plenum fan for supply air.
- Coils - Evaporator Coil and Reheat Coil.
- Filters - Two (2) inch thick pleated paper MERV 8 (standard, factory-supplied) or two (2) inch thick pleated paper MERV 13 (field-supplied) in the supply air stream.
- Split direct exchange (DX) system - DOAS unit installed with a Multi V 5 heat recovery outdoor unit..

Airflow Arrangement

The unit is capable of Constant Air volume (CAV) with two different modes. One mode is "CFM Modulation" that automatically follows the target CFM value; the other mode is manually set up using the Air Volume with RPM (%) setting.

Due to our policy of continuous product innovation, some specifications may change without notification.
©LG Electronics U.S.A., Inc., Englewood Cliffs, NJ. All rights reserved. "LG" is a registered trademark of LG Corp.

Location Selection

⚠ DANGER

To avoid the possibility of fire, ⃠ do not install the unit in an area where combustible gas may generate, flow, stagnate, or leak. Failure to do so will cause serious bodily injury or death. Before beginning installation, read the safety summary at the beginning of this manual.

Do not locate the Split Compaq DOAS product in an un-conditioned space where the relative humidity level of the surrounding air could exceed 60% RH. Temperature range in the mounted location must be maintained between 55 F and 90 F DB.

Note:

Select a location for installing the unit that meets the following conditions:

Do's

1. Where there is enough structural strength to bear the weight of the unit.
2. Operating sound from the unit will not disturb occupants.
3. Include enough space for service access.
4. Include space for drainage to ensure condensate flows properly out of the unit when it is in cooling mode.
5. Use a level indicator to ensure the unit is installed on a level plane.

⚠ WARNING

- *Securely install threaded rod hangars (bolts) and hardware to prevent the chassis falling from its installation location. There is risk of personal injury from falling equipment.*
- *Installation work must be performed by trained personnel and in accordance with all local or other applicable codes. There is risk of injury to personnel from incorrect installation.*

Note:

- *Ensure the unit is properly installed. Incorrectly installed units can malfunction resulting in degraded performance or an inoperative unit/system.*
- *Securely install threaded rod hangars (bolts) and hardware to prevent the chassis falling from its installation location. There is risk of equipment or property damage from falling equipment.*

Roughing In the DOAS Unit

1. Determine the installation location. Ensure the location has enough space to allow necessary duct connections and maintenance access.
2. Securely install the four field-provided threaded rod hangars to the overhead support locations.
3. Hang the chassis from the four field-supplied threaded rod hangars. Refer to the threaded rod hangar details in the figure.
4. Use a level to ensure the chassis is level and securely tighten the mounting nuts.
5. If local code requires an auxiliary drain pan under the unit, install a field-provided auxiliary drain pan.
6. Connect ductwork to the unit as necessary.

Figure 7: Hanging Bolt Assembly.

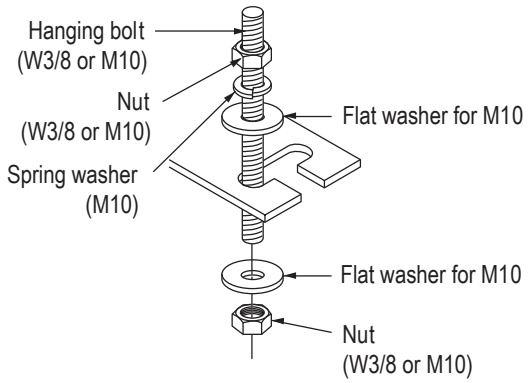

The following parts are field-supplied:

Hanging Bolt - W-3/8" or 1/2"

Nut - W-3/8" or M10

Spring Washer - M10

Included with the Unit:

Flat Washer - M10

Installation

Due to our policy of continuous product innovation, some specifications may change without notification.
©LG Electronics U.S.A., Inc., Englewood Cliffs, NJ. All rights reserved. "LG" is a registered trademark of LG Corp.

INSTALLATION

Mounting Dimensions / Ductwork Configuration

Mounting Dimensions

Table 18: Dimensions and Weights.

Frame Code	Weight (lbs.)	Overall Dimensions (in.)			Mounting Dimensions (in.)			
		W	H	D	M1	M2	M3	M4
DC	364	75.1	21.7	45.1	77.2	37.3	1.1	6.8

Figure 8: Split Compact DOAS Unit Mounting Dimensions.

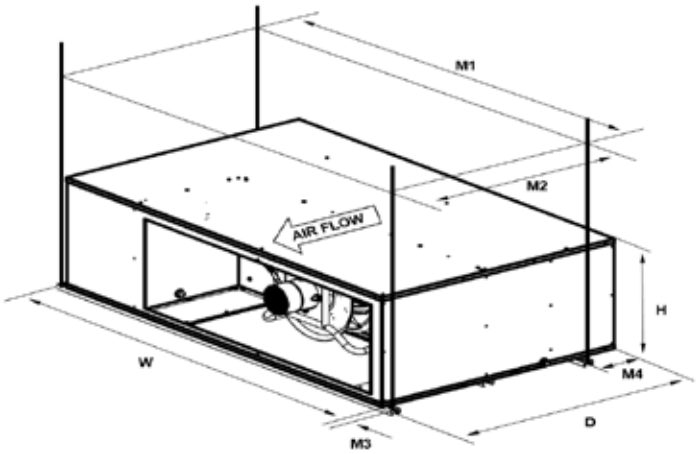

Table 19: Dimensions and Weights.

Frame Code	Weight (lbs.)	Overall Dimensions (in.)			Mounting Dimensions (in.)				
		W	H	D	M1	M2	M3	M4	M5
DC	364	75	21.7	45.1	77.2	37.3	1.1	6.8	.9
DE	364	53.8	14.6	27.6	50.5	24.4	0.7	1.4	1.2

Figure 9: Split Compact DOAS Unit Mounting Dimensions.

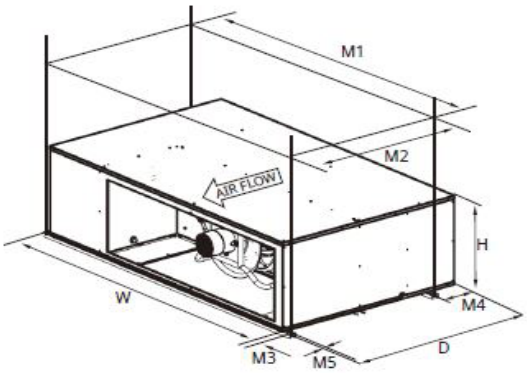

<Split Compact DOAS>

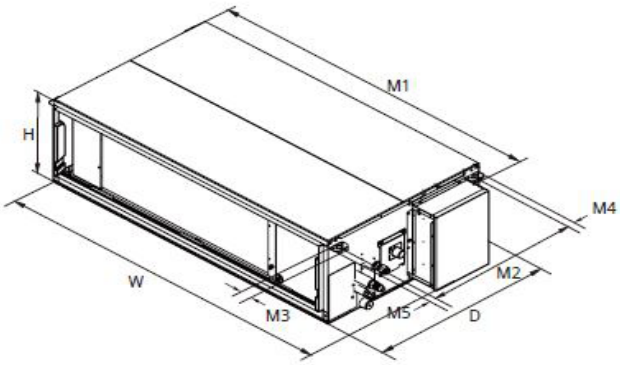

<Split Slim DOAS>

Due to our policy of continuous product innovation, some specifications may change without notification.
©LG Electronics U.S.A., Inc., Englewood Cliffs, NJ. All rights reserved. "LG" is a registered trademark of LG Corp.

Ductwork Configuration

When connecting ducts, insert a canvas duct between the main body and the duct.

- Use non-combustible duct components.
- Install sufficient insulation to prevent condensation forming on outlet duct flanges and outlet ducts.

The contractor is responsible for providing transitions to accommodate difference in sizing between the unit and the building ducts. Duct connections to collar-type openings can be made with S-cleats or overlapping joints. Apply caulk around each duct connection. Failure to seal duct connections can cause air leakage and system performance problems.

Note:

When an air duct which carries supply air or warm air passes through a combustible roof, a clearance of one (1) inch must be maintained between the outside perimeter of ductwork and any combustible materials, per NFPA Standard 90A.

Table 20: Duct Connection Dimensions.

Chassis Code	SA Outlet		OA Inlet	
	L1	**L2**	**L3**	**L4**
DC	17.6	53.8	2.4	49
DC	**L5**	**L6**	**L7**	**L8**
	12.1	9.8	48.9	16.5
DE	**L9**	**L10**	**L11**	**L12**
	10.9	30.1	12.7	47.6

Figure 10: Duct Connection Dimensions.

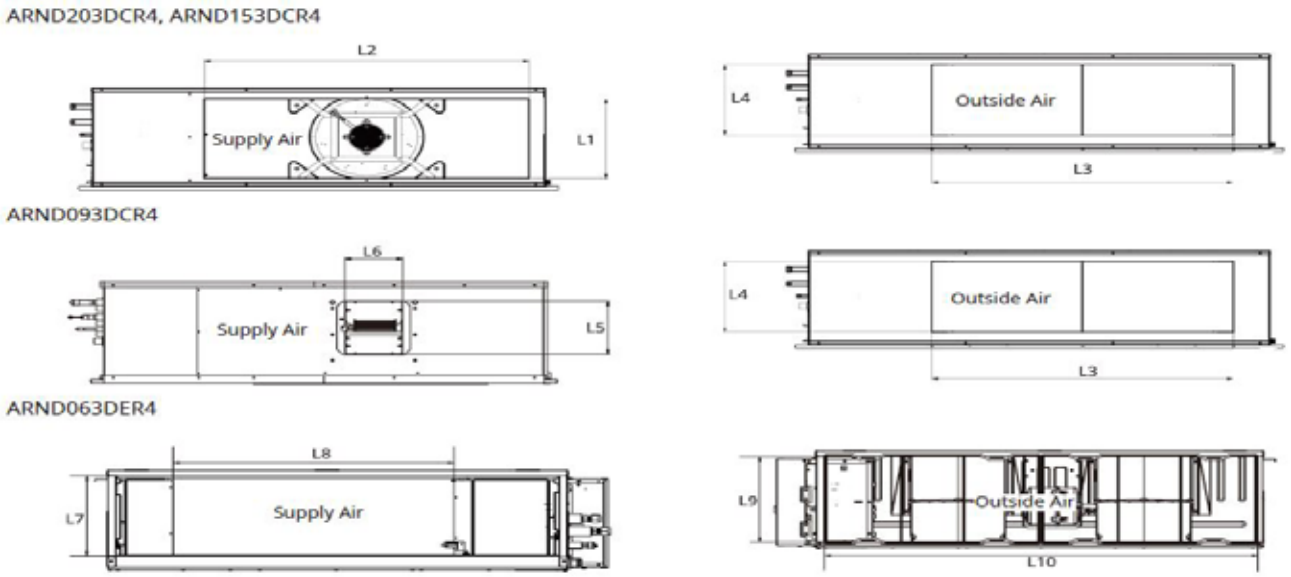

Due to our policy of continuous product innovation, some specifications may change without notification.
©LG Electronics U.S.A., Inc., Englewood Cliffs, NJ. All rights reserved. "LG" is a registered trademark of LG Corp.

INSTALLATION

Service Clearances / Piping Connections

Service Clearances

Allow service clearances as approximately indicated in the figures below. Refer to NEC and local for minimum clearances around the unit and control panel. Follow local building codes for additional service clearance requirements.

Figure 11: Service Clearance Requirements - Isometric View.

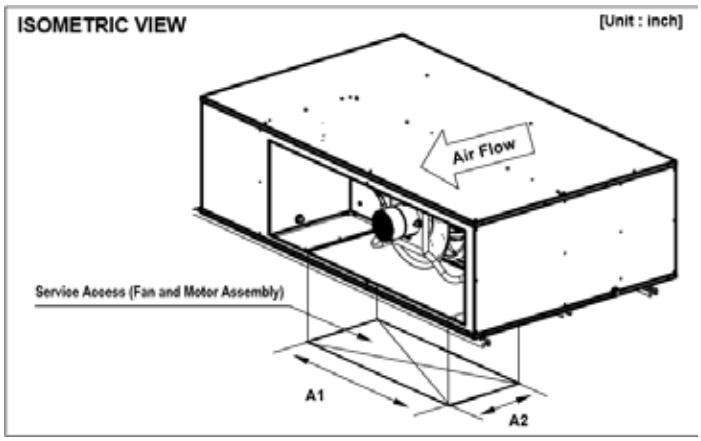

Figure 12: Service Clearance Requirements - Top View.

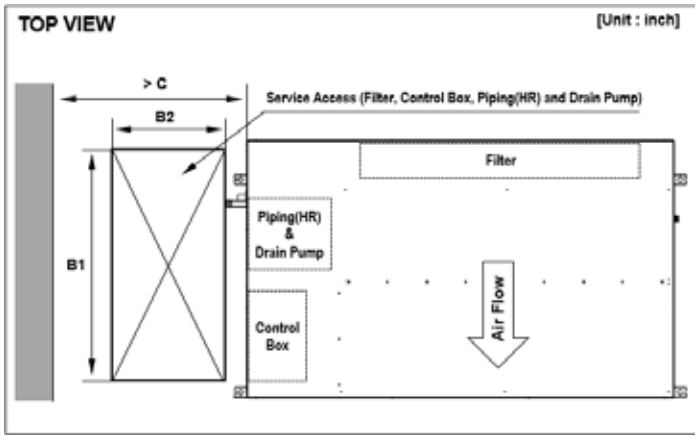

Table 21: Service Clearance Dimensions.

Chassis Code	Fan and Motor Assembly		Controller, Cycle (HR), Filter		Minimum Distance
	A1	A2	B1	B2	C
DC	45.6	19.2	45.6	19.2	36

Piping Connections

Figure 13: Refrigerant Pipe Connection Dimensions.

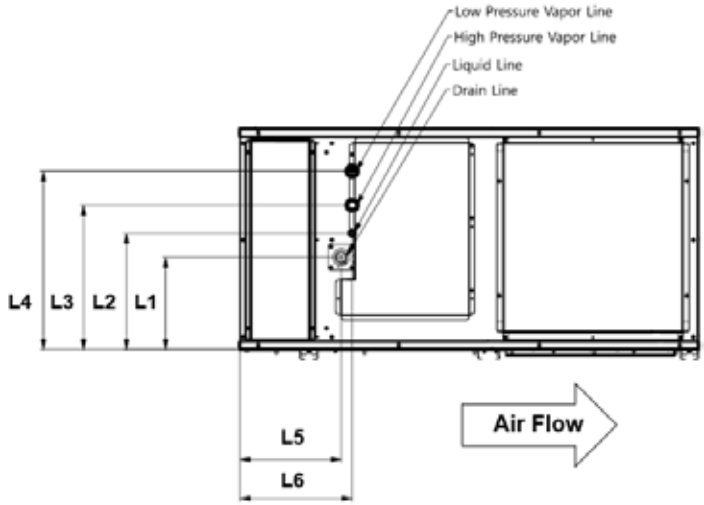

Figure 14: Condensate Pipe Connection Dimensions.

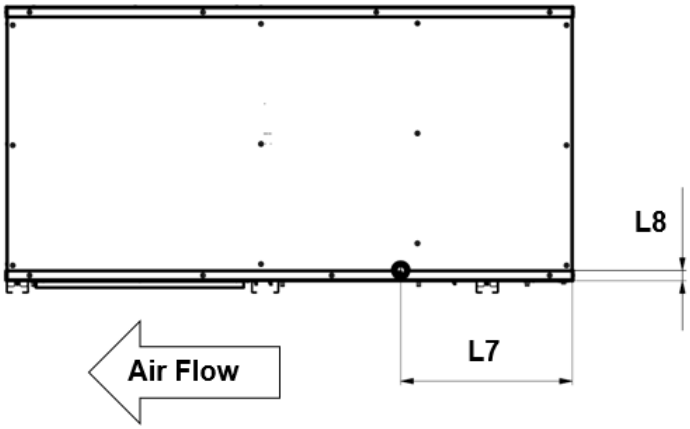

Table 22: Refrigerant and Condensate Pipe Connection Dimensions.

Chassis Code	Refrigerant Pipe (Brazed)								
	Liquid			High-Pressure Vapor			Low-Pressure Vapor		
DC	Dia.	L2	L6	Dia.	L2	L6	Dia.	L2	L6
ARND093DCR4	3/8	11.4	11	5/8	14.2	11	3/4	17.5	11
ARND153DCR4	1/2	11.4	11	3/4	14.2	11	1-1/8	17.5	11
ARND203DCR4	1/2	11.4	11	7/8	14.2	11	1-1/8	17.5	11
Condensate Pipe									
Pump Drain				Gravity Drain					
Dia.1	Conn.	L1	L5	Dia.3	Conn.	L7	L8		
1 / ID	Plain	9.1	9.9	1 / OD	NPT	13.6	0.8		

Due to our policy of continuous product innovation, some specifications may change without notification.
©LG Electronics U.S.A., Inc., Englewood Cliffs, NJ. All rights reserved. "LG" is a registered trademark of LG Corp.

Field-Installed Outdoor Air (OA) Filter

A filter rack within the OA intake ductwork or an aluminum mesh located just after the OA inlet is recommended.

Figure 15: Field-Installed Outside Air (OA) Filter.

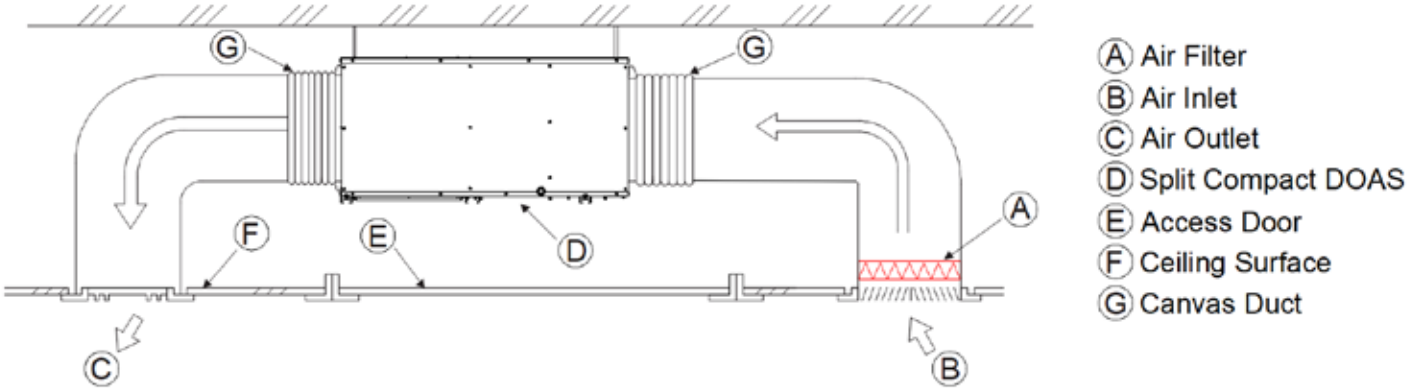

Due to our policy of continuous product innovation, some specifications may change without notification.
©LG Electronics U.S.A., Inc., Englewood Cliffs, NJ. All rights reserved. "LG" is a registered trademark of LG Corp.

UNIT PIPING

Refrigerant Safety / Piping Handling

Refrigerant Safety

⚠WARNING

Verify the maximum refrigerant concentration in the space where the indoor unit will be mounted meets the concentration limit allowed by ASHRAE Standards 15 and 34. There is danger of asphyxiation from oxygen displacement.

ASHRAE Standards 15 and 34 offer guidelines that address refrigerant safety and the maximum allowable concentration of refrigerant in an occupied space. Refrigerant will dissipate into the atmosphere, but a certain volume of air is required for this to occur safely. For R410A refrigerant, the maximum allowable concentration of refrigerant is twenty-six (26) lbs. per 1,000 cubic feet of an occupied space. Buildings with twenty-four (24) hour occupancy allow half of that concentration.1

ASHRAE Standards 15 and 34 assume that if a system develops a leak, its entire refrigerant charge will dump into the area where the leak occurs. To meet ASHRAE Standards 15 and 34, calculate the refrigerant concentration that may occur in the smallest room volume on the system, and compare the results to the maximum allowable concentration number.[1] Also consult state and local codes in regards to refrigerant safety.

[1]*Information about ASHRAE Standard 15 / 34 and addenda current as of the date of this publication.*

Piping Handling

Pipes used for the refrigerant piping system must include the specified thickness, and the interior must be clean.

While handling and storing, ⃠ do not bend or damage the pipes, and take care not to contaminate the interior with dust, moisture, etc.

Keep Pipes Capped While Storing.

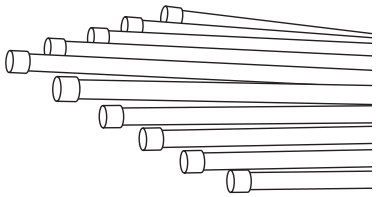

Keep refrigerant pipe dry, clean, and airtight.

	Dry	Clean	Airtight
	No moisture should be inside the piping.	No dust should be inside the piping.	No leaks should occur.
	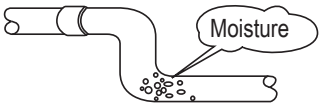	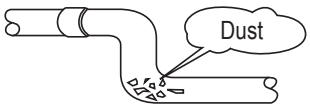	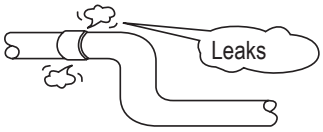
Possible Problems	- Significant hydrolysis of refrigerant oil. - Refrigerant oil degradation. - Poor insulation of the compressor. - System does not operate properly. - EEVs, capillary tubes are clogged.	- Refrigerant oil degradation. - Poor insulation of the compressor. - System does not operate properly. - EEVs and capillary tubes become clogged.	- Refrigerant gas leaks / shortages. - Refrigerant oil degradation. - Poor insulation of the compressor. - System does not operate properly.
Solutions	- Remove moisture from the piping. - Piping ends should remain capped until connections are complete. - ⃠ Do not install piping on a rainy day. - Connect piping properly at the unit's side. - Remove caps only after the piping is cut, the burrs are removed, and after passing the piping through the walls. - Evacuate system to a maximum of 500 microns and insure the vacuum holds at that level for 1 hour.	- Remove dust from the piping. - Piping ends should remain capped until connections are complete. - Connect piping properly at the side of the unit. - Remove caps only after the piping is cut and burrs are removed. - Retain the cap on the piping when passing it through walls, etc.	- Test system for air tightness. - Perform brazing procedures that comply with all applicable standards. - Perform flaring procedures that comply with all applicable standards. - Perform flanging procedures that comply with all applicable standards. - Ensure that refrigerant lines are pressure tested to 550 psig and hold for 24 hours.

Due to our policy of continuous product innovation, some specifications may change without notification.
©LG Electronics U.S.A., Inc., Englewood Cliffs, NJ. All rights reserved. "LG" is a registered trademark of LG Corp.

Brazing Procedure

Refrigerant Pipe Connections

Units include brazed connections only.

Note:

It is imperative to keep the piping system free of contaminants and debris such as copper burrs, slag, or carbon dust during installation.

1. All joints are brazed in the field. Multi V refrigeration system components contain very small capillary tubes, small orifices, electronic expansion valves, oil separators, and heat exchangers that can easily become blocked. Proper system operation depends on the installer using best practices and utmost care while assembling the piping system.
   - Store pipe stock in a dry place; keep stored pipe capped and clean.
   - Purge all pipe sections clean with dry nitrogen prior to assembly.
2. Proper system operation depends on the installer using best practices and the utmost care while assembling the piping system.
   - Use adapters to assemble different sizes of pipe.
   - Always use a non-oxidizing material for brazing. ⃠ Do not use flux, soft solder, or anti-oxidant agents. If the proper material is not used, oxidized film may accumulate and clog or damage the compressors. Flux can harm the copper piping or refrigerant oil.
   - Use a tubing cutter; ⃠ do not use a saw to cut pipe. De-bur and clean all cuts before assembly.
3. Brazing joints: Use a dry nitrogen purge operating at a minimum pressure of three (3) psig and maintain a steady flow.
   - Use a 15% silver phosphorous copper brazing alloy to avoid overheating and produce good flow.
   - Protect isolation valves, electronic expansion valves, and other heat-sensitive control components from excessive heat with a wet rag or heat barrier spray.

Figure 16: Using Nitrogen Gas During Brazing

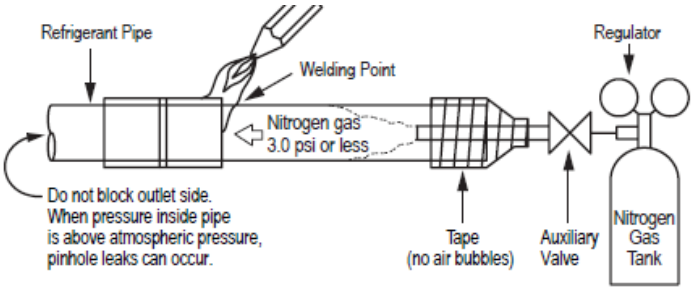

Pipe Support Location

A properly installed pipe system must have sufficient support so that pipes will not sag during the life of the system. As necessary, place supports closer for segments where potential sagging could occur. Maximum spacing of pipe supports must meet local codes.

Figure 17: Pipe Support at Split Compact DOAS Unit.

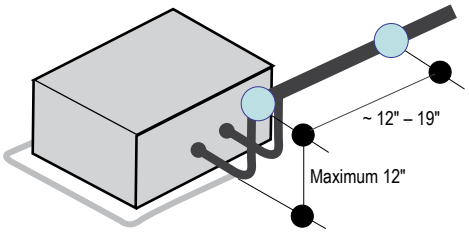

Figure 18: Typical Pipe Support Location—Change in Pipe Direction.

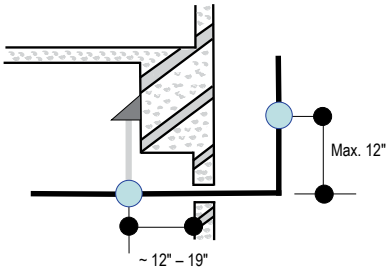

Figure 19: Pipe Support at Y-branch Fitting.

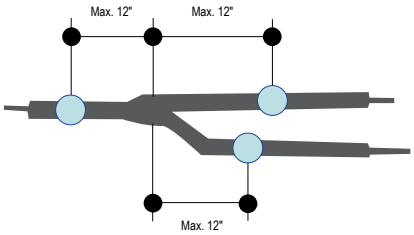

Insulate Refrigerant Pipes

Sufficiently insulate all cold surfaces to prevent moisture forming. All pipes must be insulated and each pipe must be separately wrapped. Use field-provided one-half (1/2) inch thick (or thicker) closed-cell insulation. The thickness may need to be increased based on ambient conditions and local codes.

Wrap all refrigerant piping including field-provided isolation ball valves and flexible pipe connection kits provided by LG. Glue all insulation joints with no air gaps between insulation segments, and between insulation segments and the unit case. Ensure insulation material fits snugly against the refrigeration pipe with no air space between the pipe surface and the surrounding insulation.

Protect insulation inside hangers and supports with a second insulation layer. Ensure insulation on all pipe passing through pipe hangers, inside conduit, and/or sleeves is not compressed.

Due to our policy of continuous product innovation, some specifications may change without notification.
©LG Electronics U.S.A., Inc., Englewood Cliffs, NJ. All rights reserved. "LG" is a registered trademark of LG Corp.

UNIT PIPING

Condensate Drain Connections / Condensate Pump Connection / Unit Drain Information

Condensate Drain Connections

⚠NOTE

All condensate drain connections must be properly trapped and primed before operating the unit. Failure to properly trap a drain will result in flooding the drain pan and potential water damage to the unit or building.

Unit has a factory mounted condensate pump that runs continuously while the unit is in cooling mode. The pump has an internal high level float switch that stops the unit if the water level in the pan rises too high.

Unit includes a factory-provided flexible drain hose kit with one or two clamps to connect the unit to the drain piping system. The hose can be used to connect the condensate pipe to the condensate pump connection. There is the option to direct connect a 1 NPT fitting to the drain pan's gravity drain connection.

Note:

When making condensate pipe connections, be careful ⃠ not to exert lateral force on the drain nipple. Internal damage may occur. Refer to Table 18 on page 25 for condensate pipe connection size.

Condensate Pump Connection

- Unit has a condensate pump. Note the following when connecting the condensate pipe to the unit (see figure at right).
- Units DO NOT come with check valves or a backflow prevention device. If check valves are needed, they must be field supplied.
- The maximum lift of all condensate pumps is 27 in.wg.
- Measure lift distance from the bottom surface of the unit, NOT from the condensate pipe connection.
- Slope all horizontal condensate pipe segments a minimum of 1/4 inch per foot away from the indoor unit.

Figure 20: Built in Drain Duct to Drain Piping System.

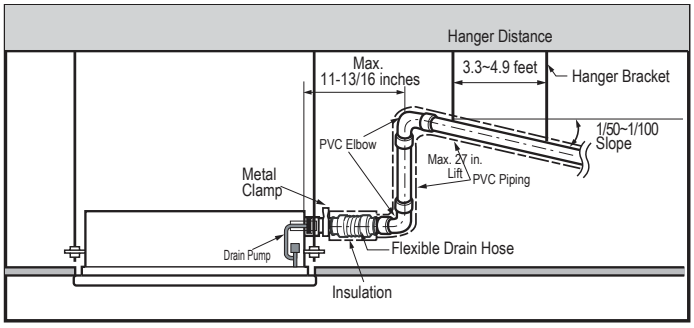

Unit Drain Information

When the bottom surface of the unit is at an elevation below the receiving building drain line connection, install an inverted trap at the top of the condensate pump discharge riser before connection to the building drain pipe.

When the receiving drain line is mounted horizontal, connect the inverted trap to the top half of the pipe. The connection point of the inverted trap to the building drain pipe must always be to the top half of the pipe and must never be over 45° either side of the upper most point of the horizontal building drain line.

If connecting to a vertical drain line or plumbing system vent line, connect the DOAS unit condensate pump discharge line using a Y-45 fitting with the double end of the Y-45 fitting facing up. When connecting to a vertical drain line include an inverted trap at the top of the IDU condensate pump discharge riser before connection to the Y-45 fitting.

Due to our policy of continuous product innovation, some specifications may change without notification.
©LG Electronics U.S.A., Inc., Englewood Cliffs, NJ. All rights reserved. "LG" is a registered trademark of LG Corp.

Gravity Condensate Pipe Connection

Unit has an auxiliary gravity condensate drain connection opposite side of condensate pump pipe connection the unit. This connection may be used instead of using the condensate pump. If the gravity drain is used, disconnect the DOAS condensate pump connector on the controller.

- Verify the unit is installed with a slight cant toward the gravity drain connection.
- Remove the rubber plug before connecting the condensate line to the indoor unit.
- The gravity condensate line must be equipped with a condensate trap for proper condensate flow. Refer to the figure at right for trap details.
- All horizontal segments of condensate pipe should be sloped a minimum of 1/4 inch per foot away from the DOAS unit.

Figure 21: Gravity Condensate Trap.

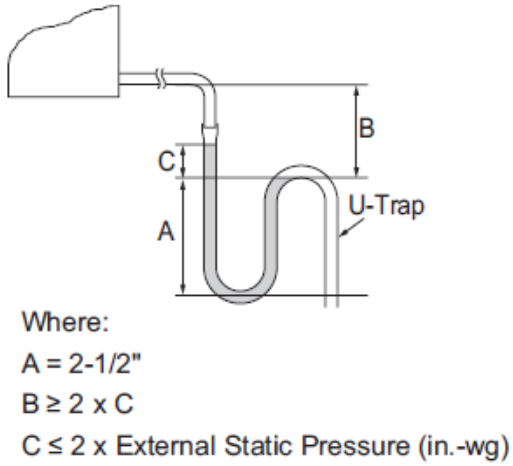

Installing the Condensation Drain Pipe

- Drain piping must slope down or flow may reverse back to unit.
- During drain piping connection, be careful not to exert extra force on the drain port on the indoor unit.
- Refer to the Specifications table for drain pipe sizing.
- Use polyvinyl chloride pipe.

Figure 22: Drain Piping Slope.

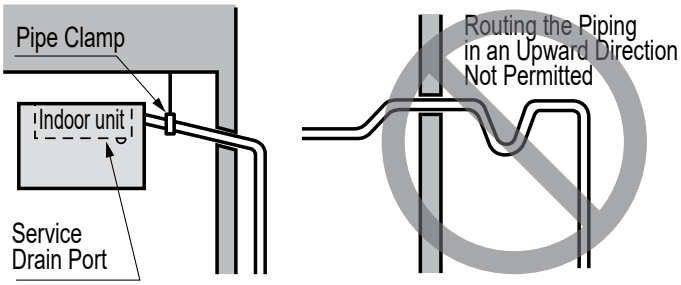

1. Refer to the figure at top right and plan the drain pipe routing so that the pipe will slope downward from the unit to its end drain location.
2. Connect the provided flexible drain pipe to the main drain pipe.
3. Pour water into the flexible pipe as shown in the figure below to test for leaks. Repair leaks if necessary.
4. Route the flexible drain pipe to the unit and connect the flexible drain pipe to the drain port of the indoor unit.
5. Install field supplied polyethylene foam insulation 5/16 inch thick or greater on the flexible drain pipe and position snugly against indoor unit.

Figure 23: ⃠ Do Not Sharply Bend the Drain Pipe.

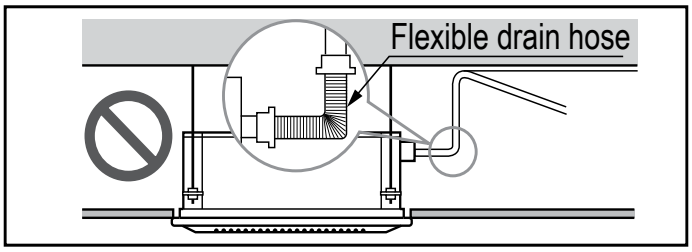

Figure 24: Testing the Drain Pipe.

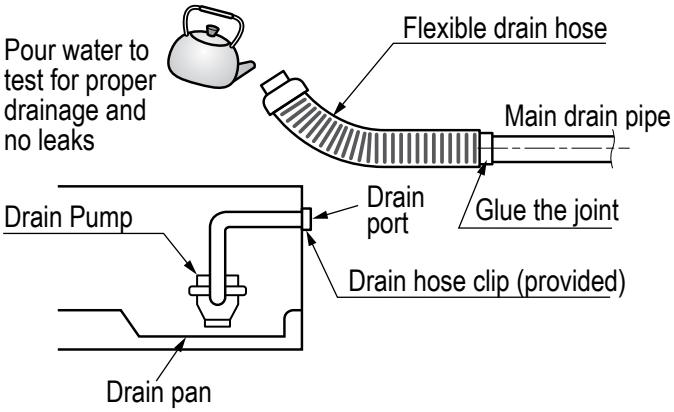

Due to our policy of continuous product innovation, some specifications may change without notification.
©LG Electronics U.S.A., Inc., Englewood Cliffs, NJ. All rights reserved. "LG" is a registered trademark of LG Corp.

UNIT PIPING

Refrigerant Piping Installation /

Refrigerant System Engineering and Allowable Pipe Length

Refrigerant Piping Installation

This product is designed to work with refrigerant R410A. Always follow these instructions to perform installation procedures.

- Be sure to use the specified refrigerant during refrigerant circulation and prevent air from contaminating the refrigerant.
- If the refrigerant leaks during the installation process, make sure to ventilate any enclosed.

Selection of Field-Supplied Piping Material

⚠WARNING

- *Always follow local codes when selecting and installing copper pipe and piping system components. Approved piping for use with Multi V products will be marked "R410 RATED" along the length of the pipe. Piping wall thickness must meet local code requirements and be approved for a maximum operating pressure of 551 psi. When bending piping, try to keep the number of bends to a minimum, and use the largest radii possible to reduce the equivalent length of installed piping; also, bending radii greater than ten (10) piping diameters can minimize pressure drop. Be sure no traps or sags are present.*
- *LG prefers the use of hard drawn copper in pipe segments connecting a Dedicated Outdoor Air System (DOAS) product and an outdoor unit.*

Failure to follow manufacturer's and industry guidelines regarding piping materials and design may result in fire or explosion, which can result in injury or death.

Selection of Piping Size

Note:

- *Always reference the LATS HVAC software report (latest version)*
- *Larger-capacity outdoor units must be the main unit in a multi-frame system*
- *Main outdoor unit capacity must be greater than or equal to the sub1 outdoor unit capacity, and, where applicable, sub1 outdoor unit capacity must be greater than or equal to the sub2 outdoor unit capacity.*
- *Connection piping from branch to branch cannot exceed the main pipe diameter (A) used by the outdoor unit.*
- *Other Indoor units cannot be connected with DOAS units.*
- *Header Branch is not allowed to install in DOAS Application.*

Refrigerant System Engineering and Allowable Pipe Length

Proper system operation depends on the installer using utmost care while assembling the piping system.

⚠WARNING

Combining Multi V DOAS units and Multi V indoor units on the same system is prohibited.

Note:

LG Electronics U.S.A.,Inc. is not responsible for any piping calculations, refrigerant leaks, degradation of performance, any other potential problems or damages caused by the interconnecting piping, their joint connections, isolation valves, or introduced debris inside the piping system.

One of the most critical elements of a Multi V system is the refrigerant piping. The table below lists pipe length limits that must be followed in the design of a Multi V refrigerant pipe system.

Table 23: Multi V 5 Refrigerant Piping System Limitations.

Pipe Length (ELF = Equivalent Length of pipe in Feet)	Longest total equivalent piping length	3,280 feet
	Longest distance from outdoor unit to DOAS unit	656 feet (Actual) 738 feet (Equivalent)
	Distance between fittings and DOAS unit	≥20 inches
	Distance between fittings and Y-branches	≥20 inches
	Distance between two Y-branches	≥20 inches
	Minimum distance between DOAS unit to any Y-branch	3 feet from DOAS unit to Y-branch
	Maximum distance between first Y-branch to farthest DOAS unit	131 feet (295 feet for conditional applications)
Elevation (All Elevation Limitations are Measured in Actual Feet)	If outdoor unit is above or below DOAS unit	164 feet
	Between DOAS Units	98 feet

Table 24: Equivalent Piping Length for Y-branches, Headers, and Other Piping Components.

Components	**Size (inches)**													
Long Radius Elbow (ft.)	1/4	3/8	1/2	5/8	3/4	7/8	1	1-1/8	1-1/4	1-3/8	1-1/2	1-5/8	1-3/4	2-1/8
Y-branch (ft.)[1]	0.5	0.6	0.7	0.8	1.2	1.3	1.5	1.6	1.8	2.0	2.1	2.3	2.5	2.8

[1]Kit contains two Y-branches: one for liquid and one for vapor.

Due to our policy of continuous product innovation, some specifications may change without notification.
©LG Electronics U.S.A., Inc., Englewood Cliffs, NJ. All rights reserved. "LG" is a registered trademark of LG Corp.

General Information

⚠WARNING

- *All power wiring and communication cable installation must be performed by authorized service providers working in accordance with local, state, and National Electrical Code (NEC) regulations related to electrical equipment and wiring, and following the instructions in this manual. Failure to do so will lead to electric shock, resulting in bodily injury or death.*
- *Be sure that main power to the unit is completely off before proceeding. Follow all safety and warning information outlined at the beginning of this manual. Failure to do so will cause electric shock, resulting in bodily injury.*
- *Familiarize yourself with the location of the circuit breaker. Be sure that a circuit breaker or some other emergency power cutoff device is in place before any power wiring is done to the system. Failure to do so will cause bodily injury or death.*
- ⃠ *Never touch any power lines or live cables before all power is cutoff to the system. To do so will cause bodily injury or death.*
- *Undersized wiring will lead to unacceptable voltage at the unit and will cause a fire, which will cause bodily injury or death.*
- *Properly ground all outdoor units and DOAS units. Ground wiring must always be installed by a qualified technician. Ground wiring is required to prevent accidental electrical shock during current leakage, which will cause bodily injury or death.*
- *Install appropriately sized breakers / fuses / overcurrent protection switches and wiring in accordance with local, state, and NEC regulations related to electrical equipment and wiring, and following the instructions in this manual. Generated overcurrent could include some amount of direct current. Using an oversized breaker or fuse will result in electric shock, causing physical injury or death.*
- ⃠ *Do not connect ground wire to refrigerant, gas, or water piping; to lightning rods; to telephone ground wiring; or to the building plumbing system. Failure to properly provide a NEC-approved earth ground will result in electric shock, resulting in physical injury or death.*

Note:

- *Consider ambient conditions (temperature, direct sunlight, inclement weather, etc.) when selecting, installing, and connecting the power wiring.*
- *Properly ground all DOAS units. Ground wiring must always be installed by a qualified technician. Improperly ground wire can cause communication problems from electrical noise, and motor current leakage.*
- *If there is a possibility of reversed phase, phase loss, momentary blackout, or the power goes on and off while the system is operating, install a field-supplied phase loss protection circuit. If the system operates in reversed phase, etc., it will damage the compressors and other components.*
- *Install appropriately sized breakers / fuses / overcurrent protection switches and wiring in accordance with local, state, and NEC regulations related to electrical equipment and wiring, and following the instructions in this manual. Generated overcurrent will include some amount of direct current. Using an oversized breaker or fuse will result in equipment malfunction and property damage.*
- ⃠ *Do not connect ground wire to refrigerant, gas, or water piping; to lightning rods; to telephone ground wiring; or to the building plumbing system. Failure to properly provide a NEC-approved earth ground can result in property damage and equipment malfunction.*
- *Verify the power imbalance is no greater than 2% between phases at each outdoor unit frame. Power imbalances will damage the compressors and other components.*

Separating Power Wiring and Communication Cables

- ⃠ Avoid running the power wiring and communication cable alongside each other; there is a strong likelihood of operation malfunction due to electrostatic and electromagnetic interference. ⃠ Do not run both in the same conduit.
- If running the power wiring and communication cable alongside each other cannot be avoided, see the table below for minimum required distances .

Table 25: Power Wire and Communication Cable Minimum Required Separation Allowable Distance.

Capacity of Power Supply Wiring (Current)		Minimum Distance[1,2]
100V or more	10A	12 inches
	50A	20 inches
	100A	40 inches
	Exceeding 100A	60 inches

[1]The figures above are based on parallel lengths up to 328 feet long. For lengths in excess of 328 feet, the distances will have to be recalculated in direct proportion to the additional line lengths involved.

[2]If the power supply waveform continues to exhibit some distortion, the space between the power wiring and communication cable must be increased.

Note:

- ⃠ *Do not secure the power wiring and communication cables together. It will result in equipment malfunction.*
- ⃠ *Do not run the power wiring and the communication cable in the same conduit. It will result in equipment malfunction.*

Due to our policy of continuous product innovation, some specifications may change without notification.
©LG Electronics U.S.A., Inc., Englewood Cliffs, NJ. All rights reserved. "LG" is a registered trademark of LG Corp.

ELECTRICAL INFORMATION

Power Wiring / Communication Cable Connections, Terminal Connections

Power Wiring / Communication Cable Connections

Best practice dictates using solderless ring or fork terminals at all power wiring and communication cable terminations. Use copper bearing ring or fork terminals; ⃠ do not use galvanized or nickle plate over steel. Use appropriate crimping tool to attach the ring or fork terminals at all power wiring and control cable terminations. To install:

Figure 25: Typical Ring Terminal.

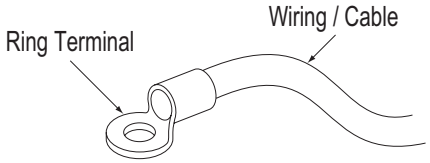

- Firmly attach the wire; secure in a way to prevent external forces from being imparted to the terminal block.
- Use an appropriately sized screwdriver for tightening the terminals.
- ⃠ Do not overtighten the connections; overtightening will damage the terminals.
- If ring terminals or fork terminals are not available, then:
- ⃠ Do not terminate different gauge wires to the power terminal block. (Slack in the wiring will generate heat.)
- When terminating wires of the same thickness, follow the instructions demonstrated in the figures below.

Figure 26: Proper and Improper Power Wiring Connections.

● :Copper Wire

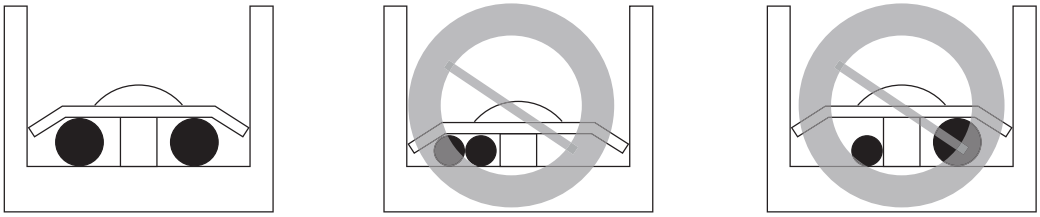

Terminate multiple power wires of the same gauge to both sides.

⃠ Do not terminate two wires on one side.

⃠ Do not terminate different gauge wires to a terminal block.

⚠ WARNING

If power wires are not properly terminated and firmly attached, there is risk of fire, electric shock, and physical injury or death.

Note:

- ⃠ *Never apply line voltage power to the communications cable terminal block. If contact is made, the PCBs will be damaged.*
- *Always include some allowance in the wiring length when terminating. Firmly attach the wiring or cable, but provide some slack to facilitate removing the electrical panels while servicing, and to prevent external forces from damaging the terminal block.*

Terminal Connections

LG uses a "JIS" type of screw for all terminals; use a JIS screwdriver to tighten and loosen these screws and ⃠ avoid damaging the terminal. ⃠ Do not overtighten the connections — overtightening will damage the terminals — but firmly and securely attach the wiring in a way to prevent external forces from being imparted to the terminal block.

Figure 27: JIS Screws.

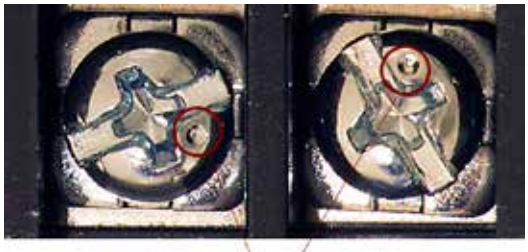

JIS DIMPLES

Note:

- *All wiring to the unit must be drawn through one of the pre-punched holes in the bottom of the floor pan immediately underneath the control center or through a field-cut hole in the side of the unit casing.*
- *The terminals labeled "GND" are NOT ground terminals. The terminals labeled ⏚ ARE ground terminals.*
- *Polarity matters. Always connect "A" to "A" and "B" to "B."*
- *Always create a wiring diagram that contains the exact sequence in which all the DOAS units are wired in relation to the outdoor unit.*
- ⃠ *Do not include splices or wire nuts in the communication cable.*

Due to our policy of continuous product innovation, some specifications may change without notification.
©LG Electronics U.S.A., Inc., Englewood Cliffs, NJ. All rights reserved. "LG" is a registered trademark of LG Corp.

Power Supply / Power Wiring Specifications

Outdoor unit(s) and Compact DOAS units must be provided power from separate breakers. For detailed information, see the Multi V Outdoor Unit Engineering and Installation Manuals on www.lghvac.com.

Compact DOAS Units

- Compact DOAS units require 1Ø, 208-230V, 60Hz power, but each unit draws minimal power.
- Where permitted by NEC and local codes, multiple DOAS units can be powered from a single breaker.
- Service switches typically must be installed for each DOAS unit
- Ground each DOAS unit separately to a solid earth ground source per NEC and local code requirements.

⚠ WARNING

- *All power wiring installation must be performed by trained service providers working in accordance with local, state, and NEC regulations related to electrical equipment and wiring, and following the instructions in this manual. Failure to do so will lead to electric shock, resulting in bodily injury or death.*
- *Use specified wiring for connections, and ensure that external force is not imparted to terminal connections. If connections are too firmly attached, it will generate heat and / or cause a fire, resulting in physical injury or death.*
- *Install appropriately sized breakers / fuses / overcurrent protection switches and wiring in accordance with local, state, and NEC regulations related to electrical equipment and wiring, and following the instructions in this manual. Generated overcurrent will include some amount of direct current. Using an oversized breaker or fuse will result in electric shock, causing physical injury or death.*
- *Use the appropriate type of overcurrent protection. Generated overcurrent will include some amount of direct current, and if the appropriate type of overcurrent protection is not installed, there is a risk of fire, electric shock, resulting in physical injury or death.*
- *Ground wiring is required to prevent accidental electrical shock during current leakage, communication problems from electrical noise, and mo¬tor current leakage. Do not connect the ground line to the pipes. There is risk of fire, electric shock, explosion, resulting in physical injury or death.*
- *Install a main shutoff switch that interrupts all power sources simultaneously. There is risk of fire, electric shock, explosion, resulting in physical injury or death.*

Note:

- *Install appropriately sized breakers / fuses / overcurrent protection switches and wiring in accordance with local, state, and NEC regulations related to electrical equipment and wiring, and following the instructions in this manual. Generated overcurrent could include some amount of direct current. Using an oversized breaker or fuse will result in equipment malfunction and property damage.*
- ⃠ *Do not connect ground wire to refrigerant, gas, or water piping to lightning rods; to telephone ground wiring; or to the building plumbing system. Failure to properly provide a National Electrical Code-approved earth ground can result in property damage and equipment malfunction.*

Due to our policy of continuous product innovation, some specifications may change without notification.
©LG Electronics U.S.A., Inc., Englewood Cliffs, NJ. All rights reserved. "LG" is a registered trademark of LG Corp.

ELECTRICAL INFORMATION

Communication Cable Specifications From Outdoor Unit to DOAS Units

Communication Cable Specifications From Outdoor Unit to DOAS Units

- Communication cable from Main Outdoor Unit to DOAS Units is to be LG supplied or field supplied 18 AWG, 2 (2 conductor), twisted, stranded, shielded. ⃠ Never splice communications cable. Ensure the communication cable shield is properly grounded to the Main Outdoor Unit chassis only. ⃠ Do not ground the Outdoor Unit to DOAS Units communication cable at any other point. Wiring must comply with all applicable local and national codes.
- Cable shields between the connected devices must be tied together and continuous from the main outdoor unit to the last component connected and insulated to prevent grounding against the DOAS Unit electrical enclosures.
- Start the communication cable at the main outdoor unit and route to the DOAS units in a daisy chain configuration. ⃠ Do not install in a starburst configuration.
- Insulation as required by NEC and local codes.
- Rated for continuous exposure of temperatures up to 140°F.
- Maximum allowable communication cable length is 3,281 feet.

⚠ WARNING

- *Ground wiring is required to prevent accidental electrical shock during current leakage, communication problems from electrical noise, and motor current leakage. ⃠ Do not connect the ground line to the pipes. There is risk of fire, electric shock, explosion, physical injury or death.*
- *⃠ Never ground the shield of the communications cable to the indoor unit frame or other grounded entities of the building. In adequate connections will generate heat, cause a fire, and result in physical injury or death.*

Note:

- *Always verify the communication cable is connected to a communications terminal on the outdoor unit(s). ⃠ Never apply line voltage power to the communication cable connection. If contact is made, the PCBs will be damaged.*
- *⃠ Never use a common multiple-core communications cable. Each communications bus shall be provided a separate cable (i.e., between outdoor unit(s) and DOAS unit(s), outdoor units and central controller(s)). If communications cables of separate systems are wired using a common multiple-core cable, it will result in a poor communications signal and unacceptable system operation.*

Due to our policy of continuous product innovation, some specifications may change without notification.
©LG Electronics U.S.A., Inc., Englewood Cliffs, NJ. All rights reserved. "LG" is a registered trademark of LG Corp.

Connection Procedure

DOAS unit installation best practices are to connect control wiring (low voltage) and then connect power wiring (high voltage). ⃠ Do not apply power to the DOAS unit or any Multi V system component until authorized to do so by the system commissioning agent.

1. Ensure the input power is disconnected and there is no power on the power input cable.
2. Remove the knockout plugs from the control box. Remember the communications cable and the power cable must enter the control box through different knockouts.
3. Install a field provided plastic or rubber grommet in the knockout holes to prevent wire chaffing.
4. If using conduit, connect the conduit to the control box using field provided fittings and industry best-practice procedures.
5. Ensure the power wiring is routed separately from the communications cable to the unit's terminal block (see figure). ⃠ Do not route the communications cable near the power cable. Provide at least three (3) to four (4) inches of slack cable at each DOAS unit.

Note:

Power wiring is field supplied. Wire size is selected based on the larger MCA value, and must comply with the applicable local and national codes.

6. Connect the power wiring to the terminal block connections. Ensure the screws securely connect the wire to the terminals and are not loose.
7. Polarity matters on the outdoor unit to DOAS unit communications bus, and must be maintained throughout the entire system. Be sure to connect:

- IDU-A terminals (outdoor unit) to ODU(IDU)-A (DOAS unit) terminals and connect IDU-B terminals (outdoor unit) terminals to ODU(IDU)-B (DOAS unit) terminals.
- Central-A terminals (outdoor unit) to ODU(CEN)-A (DOAS unit) terminals and connect Central-B terminals (outdoor unit) to ODU(CEN)-B (DOAS unit) terminals.

Refer to the preceding pages for DOAS unit wiring connections.

Note:

- *Cross connecting the A and B terminals will cause communications errors and system malfunction.*
- *Field-provided communication cable between Main ODU to DOAS units to be 18 AWG, 2 (2 conductor), twisted, stranded, shielded. Ensure the communication cable shield is properly grounded to the Main ODU chassis only. Shield must be tied together so it is continuous and insulated to prevent grounding against DOAS unit electrical cabinet. ⃠ Do not ground the ODU to DOAS unit communication cable at any other point. Wiring must comply with all applicable local and national codes.*

Figure 28: Internal Routing in DOAS Units.

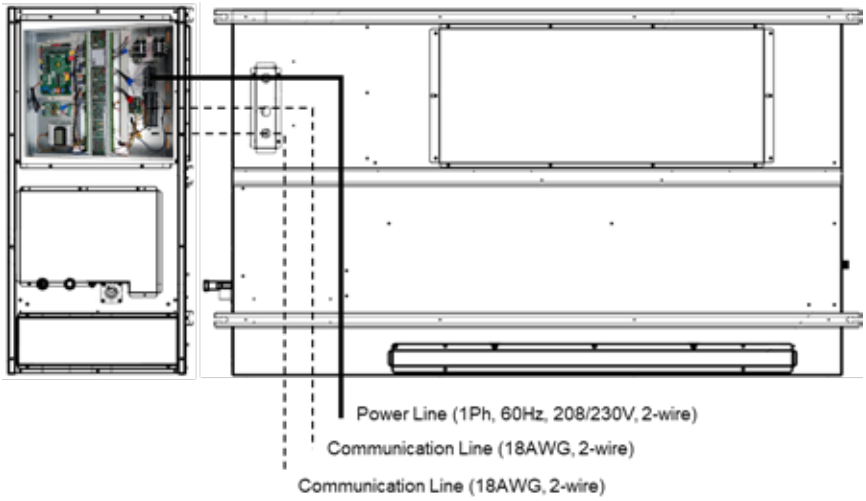

Due to our policy of continuous product innovation, some specifications may change without notification.
©LG Electronics U.S.A., Inc., Englewood Cliffs, NJ. All rights reserved. "LG" is a registered trademark of LG Corp.

ELECTRICAL INFORMATION

Field-Mounted Sensors

Field-Mounted Sensors

All field-mounted sensors are designed to be connected to the DOAS terminal strip. All sensors and end devices for the unit have been factory-wired with the exception of the following items listed.

Note:

Special control sequences are required for field-mounted sensors (Example: Space Reset Control, CO_2 Control).

Table 26: Field-Mounted Sensors.

Sensor Type	Mounting Location
Space Temperature	Wall Mounted in the Conditioned Space
Space Humidity	Wall Mounted in the Conditioned Space
Space CO_2	Wall Mounted in the Conditioned Space

Space Temperature and Humidity Sensors

When a unit is designed with space temperature and humidity reset, both a wall-mounted temperature sensor and a wall-mounted humidity sensor need to be purchased and installed at the field. Both sensors must be mounted in the space served by the DOAS unit at a height of approximately five (5) feet from the floor. Two (2) individual sensors are field-provided to prevent interference, but the individual enclosures may be installed on a wall immediately next to each another. Wiring between the unit and the temperature sensor must be through a field-supplied, 20 AWG, two or three conductor, twisted, stranded. Terminations must be made per the charts below and on the next page.

Table 27: Space Temperature Sensor Terminations.

Space Temperature Sensor	
Type No. 1	NTC 10k
Terminal Strip TB @ NTC Module	RI1
	G
Type No. 2	0~10Vdc
Terminal Strip TB @UI Module	UI5
	G

Figure 29: Space Temperature Sensor Connection (NTC).

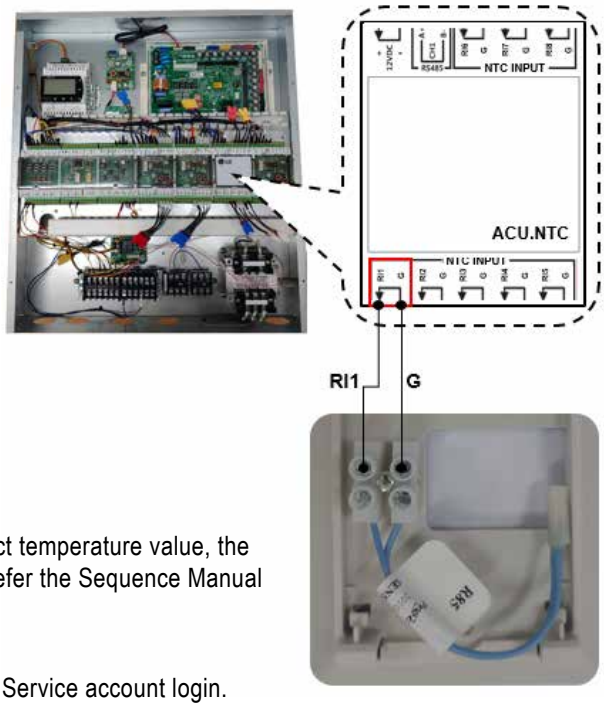

Sensor Settings:

LG recommends NTC type sensors:

- Space Temperature Sensor (NTC): MAMAC® (ST-203-EX120)
- Space Humidity Sensor (0~10Vdc): MAMAC (HU2253VDC)

If the 0~10Vdc type of sensor is installed, it needs a setting on the controller.

(MAMAC SYSTEMS is a registered trademark of MAMAC SYSTEMS, INC.)

Check the maximum and minimum of the sensing range. To display the correct temperature value, the maximum and minimum limit values of the range must be set by controller. Refer the Sequence Manual for “Sensor Settings”.

SVC manager account login:

Main Menu > Ctrl Variable > Advanced > Login and input password ‘7600’ for Service account login.

Sensor Settings:

Main Menu > Ctrl Variable > Sensor Settings. Change sensor status to “Installed”

Set Min. / Max. Value: Refer to the sensor manufacturer datasheet.

Due to our policy of continuous product innovation, some specifications may change without notification.
©LG Electronics U.S.A., Inc., Englewood Cliffs, NJ. All rights reserved. “LG” is a registered trademark of LG Corp.

Table 29: Space Humidity Sensor Terminations and Setting.

Space Humidity Sensor	
Type	0~10Vdc
Terminal Strip TB @ UI Module	UI6
	G

Note:

Do not use a single, multi-conductor cable to wire both the space temperature and humidity sensors. Use separate communication cables for each sensor. Incorrect wiring may result in communication problems or failure to operate at all.

Table 30: Space Humidity Sensor Connection (0~10Vdc).

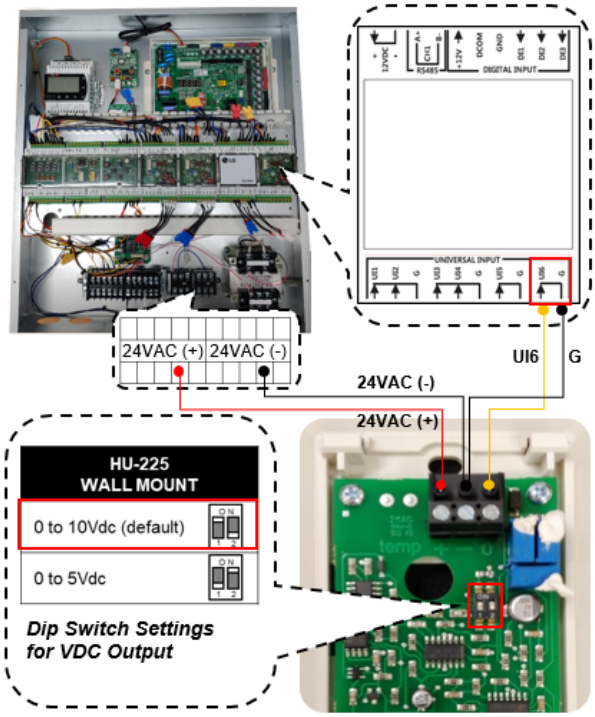

Space CO_2 Sensor

When a unit is designed with CO_2 control, it will be necessary to field-supply a CO_2 sensor. LG DOAS includes a CFM modulation controls sequence based on the CO_2 value. The sensor must be mounted in the space at a height of approximately five (5) feet from the floor. Wiring between the unit and the space CO_2 sensor must be through a field-supplied, three-conductor, 20 AWG, and stranded communication cable. Terminations must be made following the table below.

Sensor Settings:

LG recommends CO_2 (0~10Vdc) Honeywell® C7232A1008 (Honeywell is a registered trademark of Honeywell International Inc.).

Table 28: Space CO_2 Sensor Termination @ Main Module.

Space CO_2 Sensor	
Type	0~10Vdc
Terminal Strip TB @ Main Module	UI8
	G

Figure 30: CO_2 Sensor Connection (0~10Vdc).

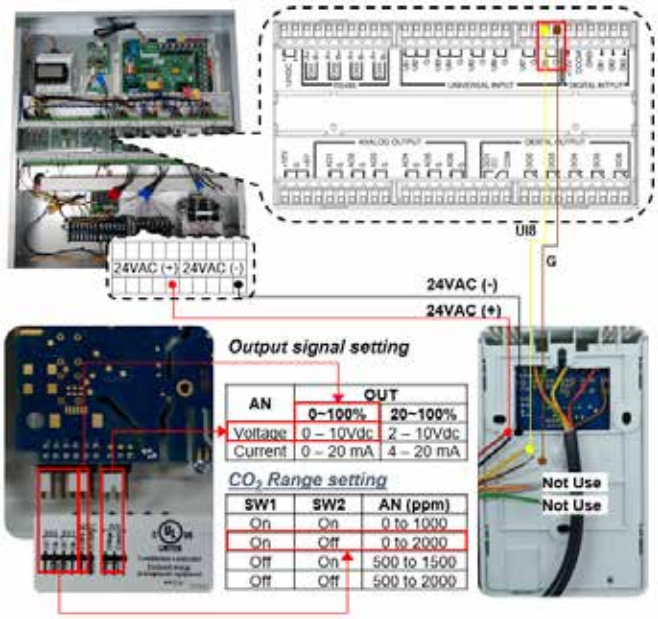

Due to our policy of continuous product innovation, some specifications may change without notification.
©LG Electronics U.S.A., Inc., Englewood Cliffs, NJ. All rights reserved. "LG" is a registered trademark of LG Corp.

LEAK / PRESSURE CHECK AND EVACUATION

Leak / Pressure Check

Leak / Pressure Check

After the refrigerant piping installation is complete, perform a leak / pressure test to check for leaks at any joints or connections within the piping system.

⚠ DANGER

Using combustible gases, including oxygen, will result in fire or explosion and result in severe personal injury or death. Use inert gas (medical-grade dry nitrogen) when checking leaks, cleaning, installing/repairing pipes, etc. The use of an 800 psig or higher nitrogen regulator is required for safety.

Note:

Split Compact DOAS units can only be installed on Multi V 5 outdoor unit systems designed for heat recovery operation.

- ⃠ *Do not apply power to the units before performing a system leak test. There is a possibility that the EEV valves will close and isolate sections of the piping system, making the leak test inconclusive. Contact your LG Applied Rep or service technician for the procedure to reopen the EEV valves before the leak test* ***ONLY*** *if the power has been applied.*
- *For multi-frame outdoor units, connect the nitrogen cylinder regulator to the gauge manifold, then connect the gauge manifold to the Schrader port on the service port of only one outdoor unit, preferably the Sub outdoor unit that is farthest away from the refrigerant piping system and connected indoor units / heat recovery units.*
- ⃠ *Never perform the leak test using refrigerant.*
- ⃠ *To avoid nitrogen entering the refrigerant system in a liquid state, the top of the cylinder must be higher than its bottom (used in a vertical standing position) when the system is pressurized.*
- *Use only a leak-free gauge manifold set.*

Leak / Pressure Check Procedure Steps

1. After the refrigerant piping installation is complete, open the isolation ball valves, if any, that will have been included in the piping system.
2. Verify that all outdoor unit service ports are closed. For multi-frame outdoor units, verify the service valves on all Main and Sub outdoor units are closed and the stem head access caps are tight. The leak / pressure check is to be performed to only the refrigerant piping system and connected DOAS units. Verify that the hot gas line (high pressure vapor), liquid line, and suction (low pressure vapor) line service ports are closed, and the stem head access caps are tight.
3. Remove the caps on the Schrader ports. Connect the nitrogen cylinder regulator to the gauge manifold, then connect the gauge manifold to the Schrader ports on the hot gas line (high pressure vapor), liquid line, and suction (low pressure vapor) service ports.

Note:

For multi-frame outdoor units, connect the gauge manifold to the Schrader ports on only one outdoor unit, preferably the Sub outdoor unit that is farthest away from the refrigerant piping system and connected DOAS units.

4. Perform the leak / pressure check at 150 psig for five (5) minutes (standing pressure check).
5. Perform the leak / pressure check at 300 psig for fifteen (15) minutes (standing pressure check).
6. Perform the leak / pressure check at 550 psig for 24 hours to make sure the piping system is leak-free. After the gauge reading reaches 550 psig, isolate the system by first closing the gauge manifold, then close the nitrogen cylinder valve. Check the flared and brazed connections for leaks by applying a bubble solution to all joints.

Due to our policy of continuous product innovation, some specifications may change without notification.
©LG Electronics U.S.A., Inc., Englewood Cliffs, NJ. All rights reserved. "LG" is a registered trademark of LG Corp.

Note:

The bubble solution must be a solution designed for refrigerant leak testing. Common soap solution must ⃠ never be used on refrigerant piping as those contain chemicals that could corrode copper and brass, and cause product malfunction.

7. If the pressure does NOT drop for 24 hours, the system passes the test. See how ambient conditions will affect the pressure test below.

8. If the pressure drops and it is not due to ambient conditions, there is a leak and it must be found. Remove the bubble solution with a clean cloth, repair the leak(s), and perform the leak / pressure check again.

9. After the system has been thoroughly tested and no leaks are found, depressurize by loosening the charging hose connector at the nitrogen cylinder regulator. When system pressure returns to normal, completely disconnect the charging hose from the cylinder, and release the nitrogen charge from all refrigerant piping. Wipe off any remaining bubble solution with a clean cloth.

Ambient Conditions and the Leak / Pressure Check

If the ambient temperature changed between the time when pressure was applied and when the pressure drop was checked, adjust results by factoring in approximately 0.79 psi for each 1°F of temperature difference.

Correction formula: (°F Temperature when pressure was applied - °F Temperature when pressure drop was checked) x 0.79.

Example: When pressure (550 psig) was applied, temperature was 80°F; 24 hours later when pressure drop (540 psig) was checked, temperature was 68°F.

Thus, (80°F - 68°F) x 0.79 = 9.5 psig.

In this case, the pressure drop of 9.5 psig was due to temperature differences, therefore, there is no leak in the refrigerant piping system.

Figure 31: Leak / Pressure Test for a System Designed with a Split Compact DOAS Unit.

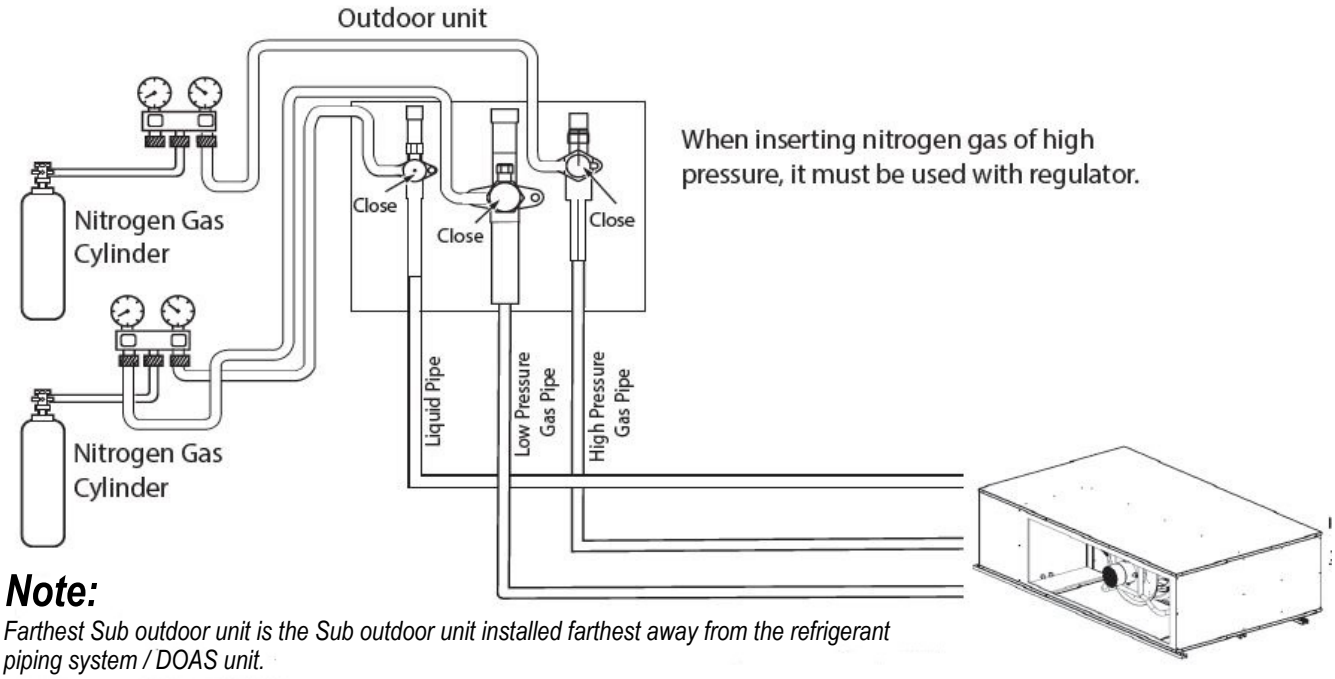

Note:

Farthest Sub outdoor unit is the Sub outdoor unit installed farthest away from the refrigerant piping system / DOAS unit.

Due to our policy of continuous product innovation, some specifications may change without notification.
©LG Electronics U.S.A., Inc., Englewood Cliffs, NJ. All rights reserved. "LG" is a registered trademark of LG Corp.

LEAK / PRESSURE CHECK AND EVACUATION

Evacuation

Evacuation Procedure

After the leak / pressure check is complete, perform an Evacuation with the entire system. Evacuation must be performed through the Schrader ports on the outdoor unit service ports.

Note:

- *For faster evacuation, the Schrader core can be removed, and an auxiliary service port can used. Make sure to re-install the original Schrader core before operating the system.*
- *Evacuate through all three (3) hot gas line (high pressure vapor), liquid line, and suction (low pressure vapor) refrigerant lines.*
- *The outdoor unit service valves must remain closed and the stem head access caps tight. ⃠ Do not open the outdoor unit service valves and release the factory refrigerant charge until the LG trained commissioner authorizes to do so. The system must be left in vacuum until the LG trained commissioner verifies the quality of the evacuation.*
- *Any field-installed ball valves in the refrigerant system (if used) must be open to ensure all piping is free and clear for evacuation on all piping and connected DOAS units.*

Note:

- *⃠ Do not apply power to the units before performing a system evacuation. There is a possibility that the EEV valves will close and isolate sections of the pipe system, making the evacuation procedure inconclusive. Contact your LG Applied Rep or service technician for the procedure to reopen the EEV valves before evacuation only if the power has been applied.*
- *For multi-frame outdoor units, connect the vacuum pump / manifold to the service port Schrader ports (or core) to only one outdoor unit, preferably the Sub outdoor unit that is installed farthest away from the refrigerant piping system and connected DOAS units.*
- *⃠ Never perform evacuation using refrigerant.*
- *Use only a vacuum pump that can reach 500 microns, vacuum rated hoses or copper tubing, and a leak-free gauge manifold set.*
- *Use only new vacuum pump oil from a properly sealed (unopened) container, and change oil in pump before **EVERY** use.*
- *Subsequent oil changes will be necessary after several hours of continuous operation; have extra oil on hand.*
- *Use a quality micron gauge in good operating order and install as far away from pump as possible.*

Evacuation Procedure Steps

1. If this procedure is performed shortly after the leak / pressure test, the caps and cores on the Schrader ports must have already been removed, and the manifold must already be connected. If the procedure was not performed shortly after the leak / pressure test, make sure to remove the caps and cores on the Schrader ports. Verify that the service valves on the outdoor unit are closed, and the stem head access caps are tight.

Note:

Connect the vacuum pump to the gauge manifold and hoses. Once the vacuum pump is first operated, if hoses, manifold, and vacuum valves are leak free (and oil is not moisture laden), the gauge must read <100 microns within one (1) minute. ⃠ Do not proceed if the gauge does not read <100 microns within one (1) minute. There is a leak in the hose, gauge manifold, or vacuum valve, and the equipment must be replaced.

2. Connect the gauge manifold along with the vacuum pump to the Schrader ports (with core removed) using vacuum hoses. Open the gauge manifold and the vacuum pump valves.

Due to our policy of continuous product innovation, some specifications may change without notification.
©LG Electronics U.S.A., Inc., Englewood Cliffs, NJ. All rights reserved. "LG" is a registered trademark of LG Corp.

3. Operate the vacuum pump and evacuate the system to the 2,000 micron level. Isolate the pump by closing the manifold gauges and the vacuum pump valve, and then watch the micron level. Micron level could rise a bit, but MUST eventually stop rising for fifteen (15) minutes.
   - If the micron level DOES NOT stop rising, there is a leak, and the leak test must be performed again.
   - If the micron level DOES rise above 2,000 micron, re-open the manifold gauges and the vacuum pump valve and continue evacuation back down to 2,000 micron level.
   - If the micron level holds at 2,000 micron, continue to step 4.

4. Break vacuum with 50 psig nitrogen purge for an appropriate amount of time (this is to “sweep” moisture from piping).

5. Purge nitrogen from the system until the pressure drops down to 1 to 3 psig.

6. Evacuate to 1,000 micron level. Isolate the pump by closing the manifold gauges and the vacuum pump valve, and then watch the micron level. Micron level could rise a bit, but MUST eventually stop rising for fifteen (15) minutes.
   - If the micron level DOES NOT stop rising, there is a leak, and the leak test must be performed again.
   - If the micron level DOES rise above 1,000 micron, re-open the manifold gauges and the vacuum pump valve, and continue evacuation back down to 1,000 micron level.
   - If the micron level holds at 1,000 micron, continue to step 7.

7. Break vacuum with 50 psig nitrogen purge for an appropriate amount of time.

8. Purge nitrogen from the system until the pressure drops down to 1 to 3 psig.

9. Evacuate to static micron level ≤500.

10. Micron level must remain ≤500 for one (1) hour. If the vacuum gauge rises and stops, the system could contain moisture, therefore, it will be necessary to repeat the steps of vacuum break and drying.

11. After maintaining the system in vacuum for one (1) hour, check if the vacuum gauge rises or not. If it doesn’t rise, then the system is properly evacuated.

12. Close manifold gauges.

13. Shut the valve before turning off the vacuum pump.

Note:

If the outdoor unit is moved to and installed in another site, only charge with new refrigerant after successful leak test and evacuation procedures have been performed. If a different refrigerant or air is mixed with the original refrigerant, the refrigerant cycle will malfunction and the unit will be damaged.

Due to our policy of continuous product innovation, some specifications may change without notification.
©LG Electronics U.S.A., Inc., Englewood Cliffs, NJ. All rights reserved. “LG” is a registered trademark of LG Corp.

LEAK / PRESSURE CHECK AND EVACUATION

Evacuation

Figure 32: Evacuation Procedure for a System Designed with a DOAS Unit.

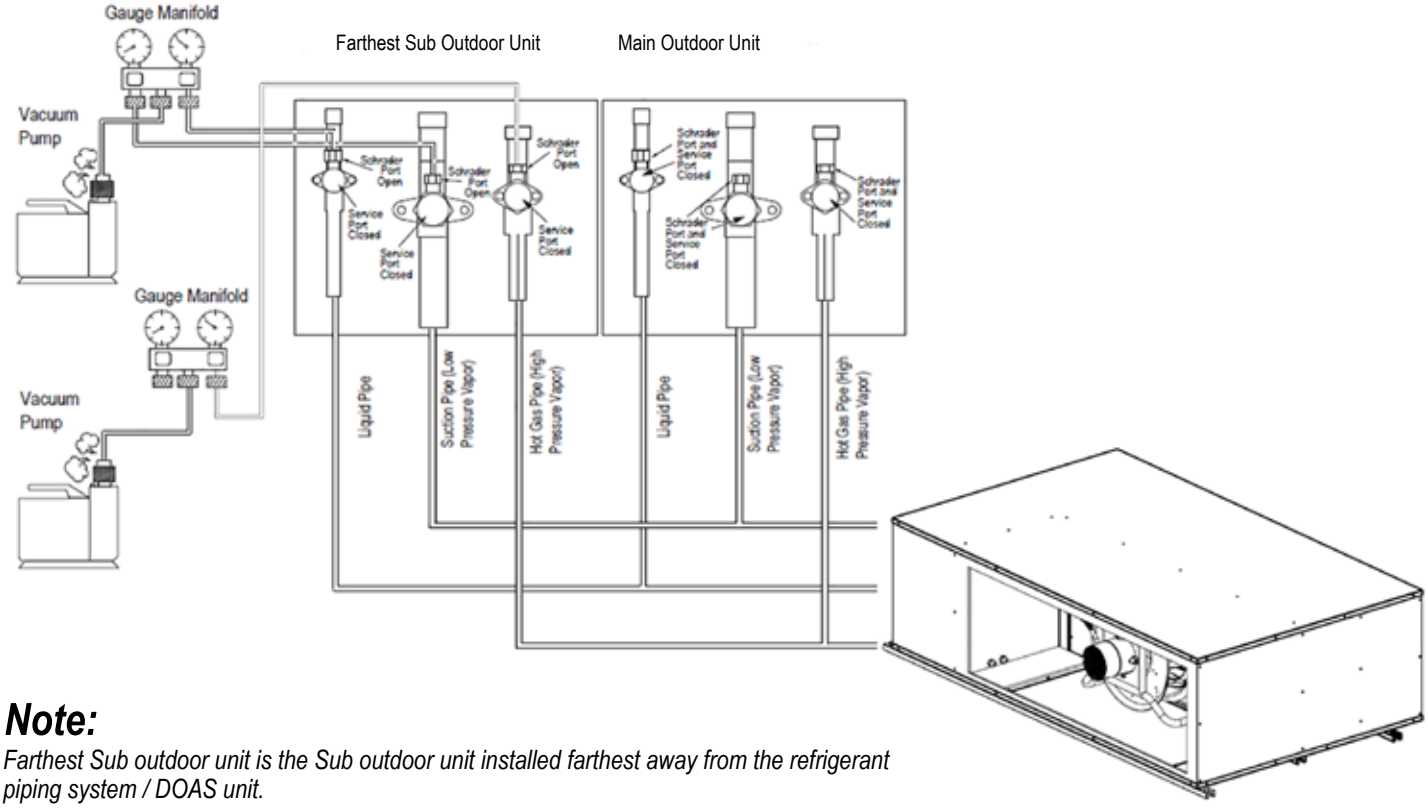

Note:

Farthest Sub outdoor unit is the Sub outdoor unit installed farthest away from the refrigerant piping system / DOAS unit.

Due to our policy of continuous product innovation, some specifications may change without notification.
©LG Electronics U.S.A., Inc., Englewood Cliffs, NJ. All rights reserved. "LG" is a registered trademark of LG Corp.

⚠ DANGER

- *Refrigerant gas is heavier than air and replaces oxygen. A massive leak will result in oxygen depletion, especially in basements, and an asphyxiation hazard will result in serious injury or death.*
- *If refrigerant gas leaks during installation, ventilate the area immediately. Refrigerant gas will result in producing toxic gas if it comes into contact with fire. Exposure to this gas will result in severe injury or death.*

⚠ WARNING

- *Refrigerant cannot be charged until field wiring has been completed. Improper installation could result in physical injury and / or death.*
- *Refrigerant must only be charged after performing the leak test and the vacuum drying. Improper installation could result in physical injury and / or death.*
- *When charging a system, take care that its maximum permissible charge is never exceeded. Improper installation could result in physical injury and / or death.*
- *Charging with an unsuitable substance can cause explosions and accidents, so always ensure that the appropriate R410A refrigerant is used. Improper installation could result in physical injury and / or death.*
- *Refrigerant cylinders must be opened slowly. Improper installation could result in physical injury and / or death.*
- *Always use protective gloves and eyewear when charging refrigerant. It could result in physical injury and / or death.*
- *When the refrigerant system is to be opened, refrigerant must be treated according to the applicable local, state, and federal codes. Improper installation could result in physical injury and / or death.*
- *To avoid compressor breakdown, ⃠ do not charge the refrigerant more than the specified amount. Improper installation could result in physical injury and / or death.*

Refrigerant Charge Worksheet

The calculation of the additional charge should take into account the length of pipe and Correction Factor (CF) value of DOAS unit.

System Tag or ID_____

Job Name: _____

Project Manager: _____ **Date:** _____

Line No.	Description		Chassis I.D.	Size	Quantity	CF (Ref.)[1]	Total (lbs.)
1	Linear feet of 1/4" liquid line[2]					0.015	
2	Linear feet of 3/8" liquid line[2]					0.041	
3	Linear feet of 1/2" liquid line[2]					0.079	
4	Linear feet of 5/8" liquid line[2]					0.116	
5	Linear feet of 3/4" liquid line[2]					0.179	
6	Linear feet of 7/8" liquid line[2]					0.238	
7	Linear feet of 1" liquid line[2]					0.323	
8	Split Rooftop DOAS (with Energy Recovery Wheel)		DB	127k (200k)		11.35	
9	Split Compact DOAS		DC	70k		6.23	
10	Split Compact DOAS		DC	120k		6.23	
11	Split Compact DOAS		DC	143k		6.23	
12	**ADDITIONAL Refrigerant Charge Required (Sum of lines 1-11)**						
13	Outdoor Unit Factory Refrigerant Charge	13A	ARUM072*TE5	72k		14.3	
		13B	ARUM096*TE5	96k		23.2	
		13C	ARUM121*TE5	121k		23.2	
		13D	ARUM144*TE5	144k		26.5	
		13E	ARUM168*TE5	168k		26.5	
		13F	ARUM192*TE5	192k		30.9	
		13G	ARUM216*TE5	216k		37.5	
		13H	ARUM241*TE5	241k		37.5	
14	**Total ODU FACTORY Refrigerant Charge (Sum of factory refrigerant charges for all ODUs in the system, lines 13A – 13H)**						
15	**TOTAL SYSTEM CHARGE Sum of Additional Refrigerant Charge Required (line 12) and Total ODU Factory Refrigerant Charge (line 14)**						

[1]CF (Ref.) = Correction Factor for Refrigerant Charge.

[2]For refrigerant charge purposes, consider only the liquid line; ignore the vapor line(s).

Due to our policy of continuous product innovation, some specifications may change without notification.
©LG Electronics U.S.A., Inc., Englewood Cliffs, NJ. All rights reserved. "LG" is a registered trademark of LG Corp.

STARTUP CONFIGURATION

Checks Before Initial Startup

Startup Configuration

When connecting with DOAS system, ensure that all information in DOAS Installation Manual is read by installers and that the system is configured as applicable per manufacturer requirements.

⚠DANGER

Split Compact DOAS unit power source is 208-230V, 1-phase, 60Hz. Make sure that the field wiring corresponds to the voltage on the unit; instructions described in the Electrical System section. Incorrect wiring can cause a fire, resulting in physical injury and / or death.

⚠WARNING

- ⃠ *Do not operate the unit without the aluminum filters installed. There is a risk of physical injury and / or death.*
- ⃠ *Do not run unit during construction phase. There is a risk of physical injury and / or death.*

Note:

- ⃠ *Do not use the Fn14, Fn30, Fn8, or Se14 functions of the Multi V 5 heat recovery outdoor unit if a Split Compact DOAS unit is part of its system. These functions could interrupt proper target pressure control for the DOAS unit. (Fn7 would not be activated based on the DOAS fan control setting if the outdoor unit is in defrost mode.)*
- ⃠ *Do not operate the unit without the aluminum filters installed. The filters prevent foreign objects such as leaves, birds, etc., from entering, which could damage internal components.*
- ⃠ *Do not run unit during construction phase. It could result in damage to internal components and void the warranty.*

Checks Before Initial Startup

After the installation of the unit, check the following items. Once all below checks are fulfilled, and all panels are re-attached, only then can the unit be powered up.

1. Installation: Check that the unit is properly installed to avoid abnormal noises and vibrations when starting up the unit.
   - Verify diameter seal settings on the energy recovery wheel
   - Check all fasteners, set-screws, and locking collars on the fans, bearings, drives, motor bases and accessories for tightness.
   - Dirt can clog the filters during building construction. Replace any dirty pleated filters and clean the aluminum mesh filters in the intake hood.
   - Verify proper drain trap installation.
2. Field wiring: Be sure that the field wiring has been carried out according to the instructions described in “Electrical System section according to the wiring diagrams, and to local, state, and federal codes.
3. Power supply voltage: Check the power supply voltage on the local supply panel. The voltage must correspond to the voltage on the identification label of the unit.
4. Ground wiring: Be sure that the ground wires have been connected properly and that the ground terminals are tightened.
5. Fuses, circuit breakers, or protection devices: Check that the fuses, circuit breakers, or the locally installed protection devices are of the size and type specified in the Electrical System section on pages 32-39. Be sure that neither a fuse nor a protection device has been bypassed.
6. Internal wiring: Visually check the control box and the inside of the unit for loose connections or damaged electrical components.
7. Pipe size and pipe insulation: Be sure that correct pipe sizes are installed, and that the pipes are fully and properly insulated.
8. Service valves: Be sure that all service valves are open.
9. Damaged equipment: Check the inside of the unit for damaged components or pipes.
10. Refrigerant leak: Check the inside of the unit for refrigerant leaks. If there is a refrigerant leak, try to repair the leak. If the repair is unsuccessful, call your local dealer. ⃠ Do not touch refrigerant that has leaked out from refrigerant piping connections. This may result in frostbite.
11. Oil leak: Check the compressor for oil leaks. If there is an oil leak, try to repair the leak. If the repairing is unsuccessful, call the local manufacturer representative.
12. Air inlet / outlet: Check that the air inlet and outlet of the unit is not obstructed by paper, cardboard, or any other material.
13. Record the field-settings and contents: Record them on the accessory REQUEST FOR THE INDICATION label and attach the label on the back of the front panel.
14. Record the installation date: Record the installation date on the accessory REQUEST FOR THE INDICATION label and attach the label on the back of the front panel.

Due to our policy of continuous product innovation, some specifications may change without notification.
©LG Electronics U.S.A., Inc., Englewood Cliffs, NJ. All rights reserved. “LG” is a registered trademark of LG Corp.

Safety Precautions

The instructions below must be followed to prevent product malfunction, property damage, injury or death to the user or other people. Incorrect operation due to ignoring any instructions will cause harm or damage. The level of seriousness is classified by the symbols below.

Table of Symbols

⚠ DANGER	*This symbol indicates an imminently hazardous situation which, if not avoided, will result in death or serious injury.*
⚠ WARNING	*This symbol indicates a potentially hazardous situation which, if not avoided, could result in death or serious injury.*
⚠ CAUTION	*This symbol indicates a potentially hazardous situation which, if not avoided, may result in minor or moderate injury.*
⚠ NOTE	*This symbol indicates situations that may result in equipment or property damage accidents only.*
Note:	*This symbol indicates information related to the current procedure.*
⃠	*This symbol indicates an action that should not be performed.*

Installation

⚠ DANGER

⃠ **Do not use or store flammable gas or combustibles near the unit.**
There is risk or fire or explosion, which will result in death or serious injury.

⃠ **Do not supply power to the unit until all wiring and piping are completed or reconnected and checked.**
There is risk of physical injury or death due to electric shock.

⚠ WARNING

⃠ **Do not install or remove the unit by yourself (end-user). Ask the dealer or an LG trained technician to install the unit.**
Improper installation by the user may result in water leakage, fire, explosion, electric shock, resulting in physical injury or death.

Installation, startup, and service must be performed by a qualified installer or service agency.
Improper installation, adjustment, service, maintenance, or alteration can cause personal injury or loss of life.

For replacement of an installed unit, always contact a trained service provider.
There is risk of fire, electric shock, explosion, resulting in physical injury or death.

Replace all control box and panel covers.
If cover panels are not installed securely, dust, water and animals may enter the unit, causing fire, electric shock, and resulting in physical injury or death.

⃠ **Do not install the unit using defective hanging, attaching, or mounting hardware.**
There is risk of physical injury or death.

Wear protective gloves when handling equipment.
Sharp edges may cause personal injury.

Dispose of the packing materials safely.
- *Packing materials, such as nails and other metal or wooden parts may cause puncture wounds or other injuries.*
- *Tear apart and throw away plastic packaging bags so that children may not play with them and risk suffocation and death.*

⃠ **Do not install the unit in any location exposed to open flame or extreme heat.** ⃠ **Do not touch the unit with wet hands.**
There is risk of fire, electric shock, explosion, resulting in physical injury or death.

Install the unit considering the potential for earthquakes.
Improper installation may cause the unit to fall, resulting in physical injury or death.

⃠ **Do not change the settings of the protection devices.**
If the pressure switch, thermal switch, or other protection device is shorted and forced to operate improperly, or parts other than those specified by LG are used, there is risk of fire, electric shock, explosion, resulting in physical injury or death.

Due to our policy of continuous product innovation, some specifications may change without notification.
©LG Electronics U.S.A., Inc., Englewood Cliffs, NJ. All rights reserved. "LG" is a registered trademark of LG Corp.

ELECTRIC PREHEATER ACCESSORY

Safety Precautions

Installation, continued.

⚠ CAUTION

Be very careful when transporting the product.

- ⃠ *Do not attempt to carry the product without assistance.*
- *Some products use polypropylene bands for packaging.* ⃠ *Do not use polypropylene bands to lift the unit.*
- *Suspend the unit from the base at specified positions.*
- *Support the unit at a minimum of four points to avoid slippage from rigging apparatus.*
- *Failure to follow these directions may result in minor or moderate physical injury.*

⚠ NOTE

Installation, startup, and service must be performed by a qualified installer or service agency.
Improper installation, adjustment, service, maintenance, or alteration can cause property damage.

Install the unit in a safe location where no one can step on or fall onto it. ⃠ **Do not install the unit with defective hanging, attaching, or mounting hardware.**
There is risk of unit and property damage.

Do not locate the Split Compaq DOAS product in an un-conditioned space where the relative humidity level of the surrounding air could exceed 60% RH. Temperature range in the mounted location must be maintained between 55 F and 90 F DB.

⃠ **Don't store or use flammable gas / combustibles near the unit.**
There is risk of product failure.

Wiring

⚠ DANGER

High voltage electricity is required to operate this system. Adhere to the National Electrical Codes and these instructions when wiring.
Improper connections and inadequate grounding can cause accidental injury or death.

Always ground the unit following local, state, and National Electrical Codes.

Turn the power off at the nearest disconnect before servicing the equipment.
Electric shock can cause physical injury or death.

Properly size all circuit breakers or fuses.
There is risk of fire, electric shock, explosion, resulting in physical injury or death.

⚠ WARNING

The information contained in this manual is intended for use by an experienced, trained electrician familiar with the U.S. National Electric Code (NEC) who is equipped with the proper tools and test instruments.
Failure to carefully read and follow all instructions in this manual can result in injury or death.

Ensure the unit is connected to a dedicated power source that provides adequate power.
If the power source capacity is inadequate or the electric work is not performed properly, it may result in fire, electric shock, resulting in physical injury or death.

Refer to local, state, and federal codes, and use power wires of sufficient current capacity and rating.
Wires that are too small may generate heat and cause a fire, resulting in physical injury or death.

Secure all field wiring connections with appropriate wire strain relief.
Improperly securing wires will create undue stress on equipment power lugs. Inadequate connections may generate heat, cause a fire and results in physical injury or death.

Properly tighten all power connections.
Loose wiring may overheat at connection points, causing a fire, resulting in physical injury or death.

Due to our policy of continuous product innovation, some specifications may change without notification.
©LG Electronics U.S.A., Inc., Englewood Cliffs, NJ. All rights reserved. "LG" is a registered trademark of LG Corp.

⚠ NOTE

⃠ Do not supply power to the unit until all electrical wiring, controls wiring, piping, installation, and refrigerant system evacuation are completed.
The system will malfunction.

The information contained in this manual is intended for use by an experienced, trained electrician familiar with the U.S. National Electric Code (NEC) who is equipped with the proper tools and test instruments.
Failure to carefully read and follow all instructions in this manual can result in equipment malfunction or property damage.

Operation

⚠ DANGER

⃠ Do not provide power to or operate the unit if it is flooded or submerged.
There is risk of fire, electric shock, resulting in physical injury or death.

Use a dedicated power source for this product.
There is risk of fire, electric shock, resulting in physical injury or death.

⚠ WARNING

⃠ Do not allow water, dirt, or animals to enter the unit.
There is risk of fire, electric shock, resulting in physical injury or death.

⃠ Do not operate the unit with the panel(s) or protective cover(s) removed; keep fingers and clothing away from moving parts.
The rotating, hot, cold, and high-voltage parts of the unit can cause physical injury or death.

Periodically check power cable and connection for damage.
Cable must be replaced by the manufacturer, its service agent, or similar qualified persons in order to avoid physical injury and / or electric shock.

⃠ Do not operate the disconnect switch with wet hands.
There is risk of fire, electric shock, resulting in physical injury or death.

Periodically verify the hanging bolts and other hardware securing the unit have not deteriorated.
If the unit falls from its installed location, it will cause property damage, product failure, resulting in physical injury or death.

Securely attach the electrical cover to the unit.
Non-secured electrical covers can result in burns or electric shock due to dust or water in the service panel.

Ensure no power is connected to the unit other than as directed in this manual. Remove power from the unit before removing or servicing the unit.
There is risk of unit failure, fire, electric shock, resulting in physical injury or death.

⚠ NOTE

Clean up the site after installation is finished, and check that no metal scraps, screws, or bits of wiring have been left inside or surrounding the unit.

⃠ Do not use this equipment in mission critical or special-purpose applications such as preserving foods, works of art, wine coolers or refrigeration.

⃠ Do not allow water, dirt, or animals to enter the unit.
There is risk of unit failure.

⃠ Do not block the inlet or outlet.
Unit may malfunction.

⃠ Do not operate the unit with the panel(s) opened or removed; keep fingers and clothing away from moving parts.
Non-secured covers can result in malfunction due to dust or water.

Periodically verify the equipment mounting hardware has not deteriorated.
If the base collapses, the unit could fall and cause property damage or product failure.

⃠ Do not turn off the main power switch after operation has been stopped.
Wait at least five (5) minutes before turning off the main power switch, otherwise it will result in product malfunction.

Due to our policy of continuous product innovation, some specifications may change without notification.
©LG Electronics U.S.A., Inc., Englewood Cliffs, NJ. All rights reserved. "LG" is a registered trademark of LG Corp.

ELECTRIC PREHEATER ACCESSORY

Overview

Structure

Figure 33: Split Compact DOAS and Electric Preheater.

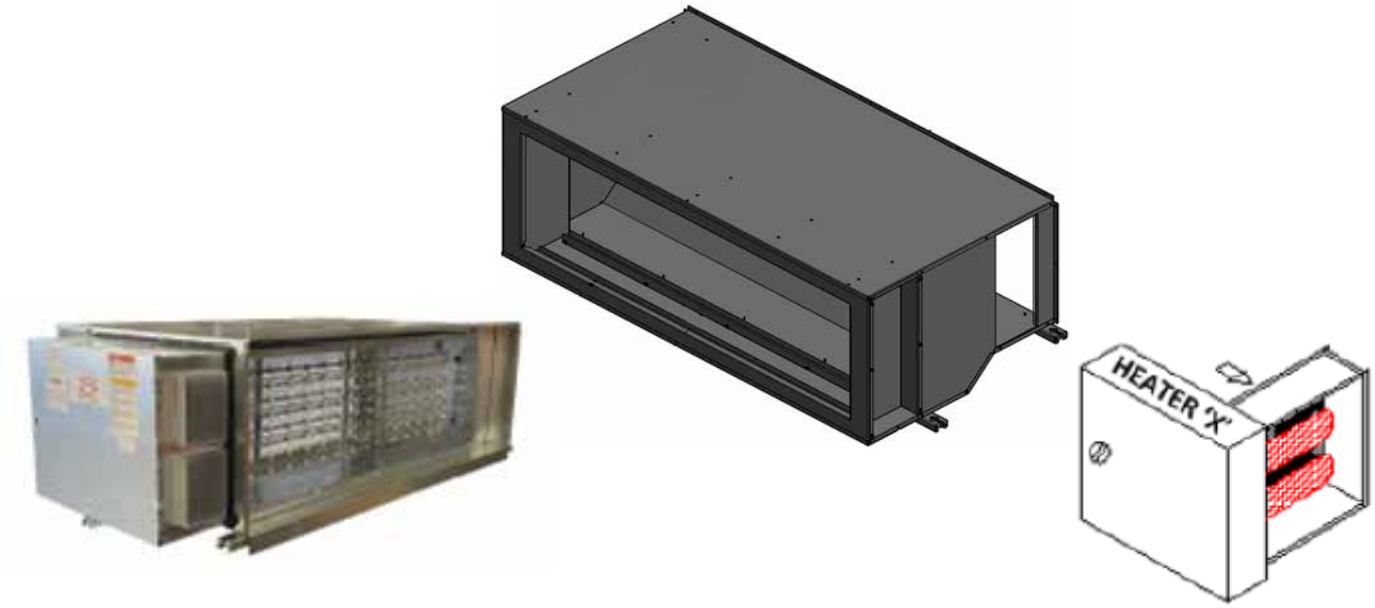

Control Box

Figure 34: Control Box Components.

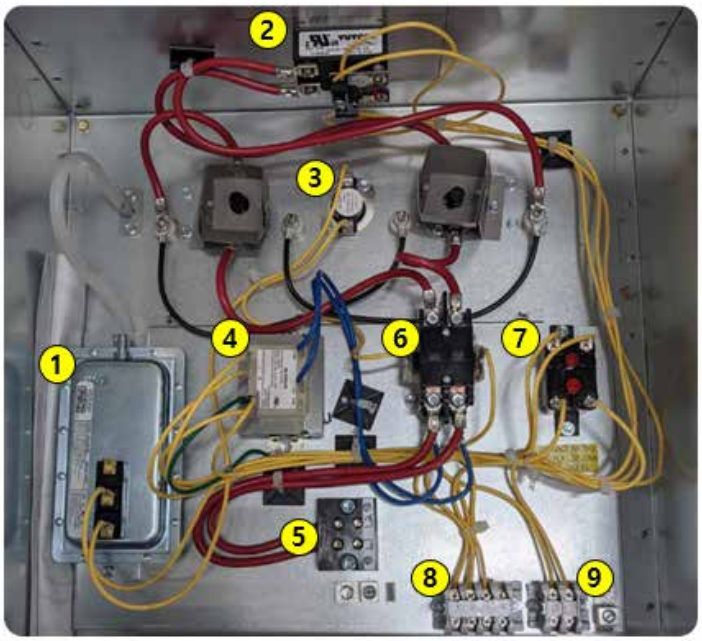

Table 31: Control Box Components Legend.

Number	Description
1	Air Flow Switch
2	Solid State Relay (SSR)
3	Thermal Fuse
4	Transformer
5	Terminal Block (Power Supply)
6	Conductor
7	Fan Relay
8	Interface Module
9	24V AC Input

Due to our policy of continuous product innovation, some specifications may change without notification.
©LG Electronics U.S.A., Inc., Englewood Cliffs, NJ. All rights reserved. "LG" is a registered trademark of LG Corp.

Electric Preheater Models

Table 32: Electric Preheater Models.

Model No.	Capacity	Power Supply	Control Step
ZWPREHTR01	10 kW	208 / 230V, 60Hz, 1Ph	SCR 1:10
ZWPREHTR02	20 kW	208 / 230V, 60Hz, 1Ph	SCR 1:10

Minimum Airflow by Heater Capacity

Table 33: Minimum Airflow by Heater Capacity Table.

Model No.	Capacity	Minimum Air flow Rate (CFM)
ZWPREHTR01	10 kW	900
ZWPREHTR02	20 kW	1,100

Electric Preheater Specifications

Table 34: Electric Preheater Specifications.

Model No.	Power Supply	Amps	MOCP	Control	Stage	Mount	Accessories Code
ZWPREHTR01	208 / 230V, 60Hz, 1Ph	48.1	70	24V AC	1	Slip-In	*03, *06, *08
ZWPREHTR02	208 / 230V, 60Hz, 1Ph	95.7	125	24V AC	1	Slip-In	*03, *06, *08, *14

** Indicates an item automatically selected per ET/UL or NEC requirements.*

Table 35: Electric Preheater Accessories.*

Accessories Code*	Name	Description
03	Disconnecting Contactors	Contactors provide full disconnection of all non-neutral voltage legs.
06	Manual Backup Limits	Manually resettable thermal overloads.
08	Power Fusing	Protects each heater circuit from overvoltage / overcurrent.
14	Control Transformer	Used when control voltage differs from line voltage.

Minimum Entering Temperature by Airflow

Note:

Outdoor unit's operation range limit is -22°F. In the case of the ZWPREHTR02 (20 kW) model, the refrigerant cycle's operating limit extends to temperatures below -22°F.

Table 36: ZWPREHTR01 (10 kW) Minimum Entering Temperatures.

Air Flow Rate (CFM)	Minimum Entering Temperature (°F)
900	-21
1,000	-18
1,100	-15
1,200	-12
1,300	-10
1,400	-9
1,500	-7
1,600	-6
1,700	-5
1,800	-4
1,900	-3
2,000	-2

Table 37: ZWPREHTR02 (20 kW) Minimum Entering Temperatures.

Air Flow Rate (CFM)	Minimum Entering Temperature (°F)
1,100	-40
1,200	-37
1,300	-33
1,400	-30
1,500	-27
1,600	-25
1,700	-23
1,800	-21
1,900	-19
2,000	-18

Due to our policy of continuous product innovation, some specifications may change without notification.
©LG Electronics U.S.A., Inc., Englewood Cliffs, NJ. All rights reserved. "LG" is a registered trademark of LG Corp.

ELECTRIC PREHEATER ACCESSORY

Dimensions

Figure 35: 10 kW Electric Preheater Dimensions (ZWPREHTR01).

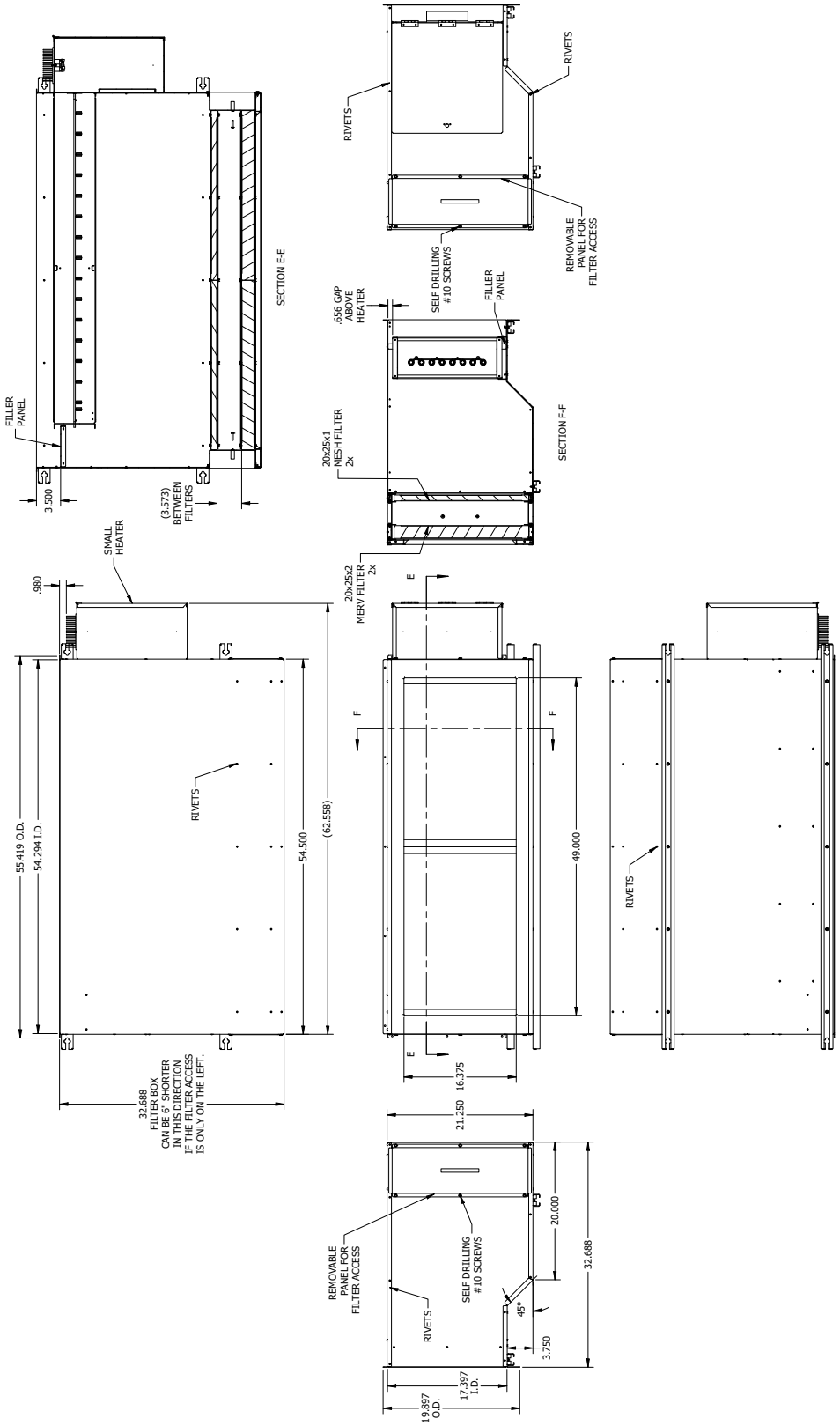

Due to our policy of continuous product innovation, some specifications may change without notification.
©LG Electronics U.S.A., Inc., Englewood Cliffs, NJ. All rights reserved. "LG" is a registered trademark of LG Corp.

Figure 36: 20 kW Electric Preheater Dimensions (ZWPREHTR02).

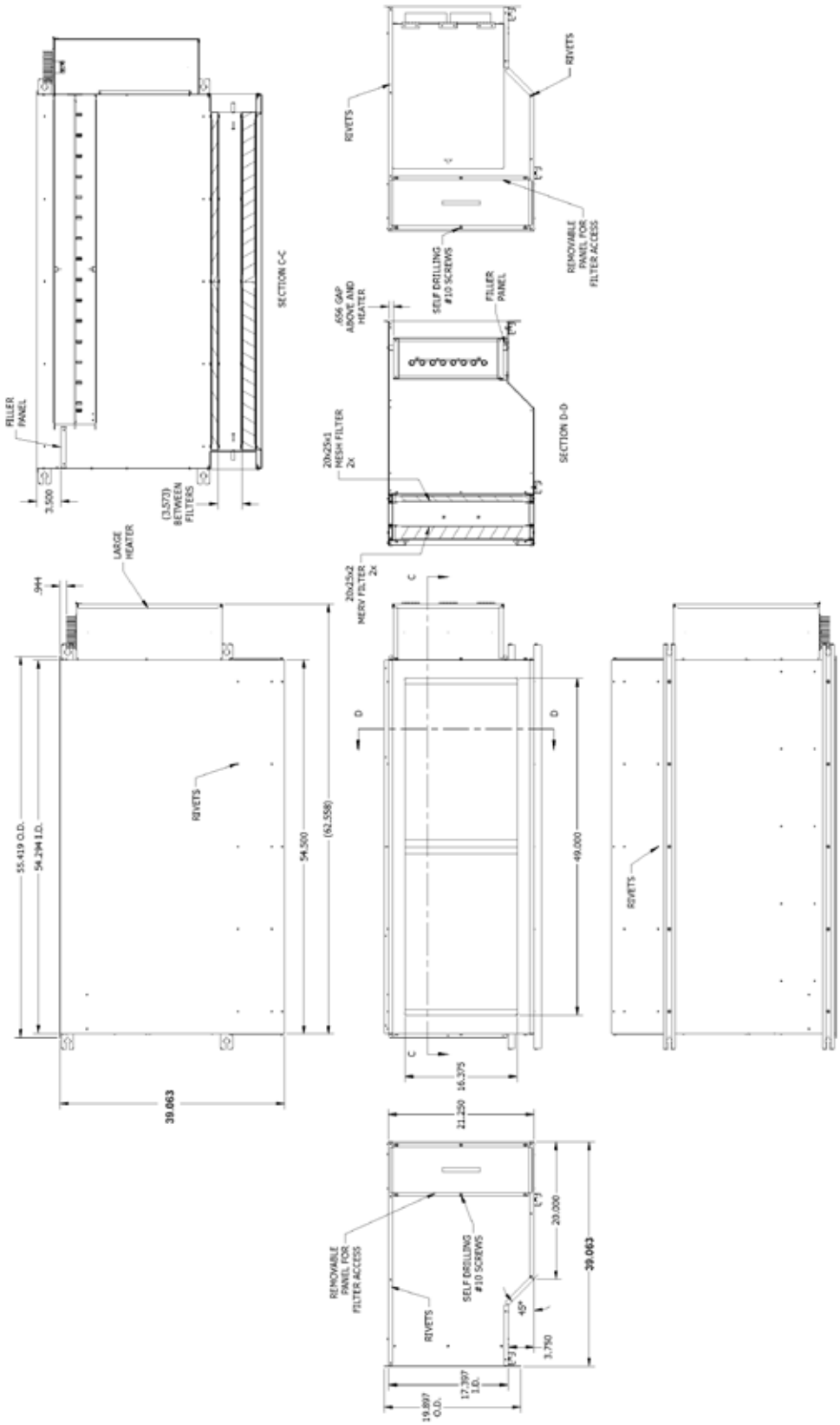

Due to our policy of continuous product innovation, some specifications may change without notification.
©LG Electronics U.S.A., Inc., Englewood Cliffs, NJ. All rights reserved. "LG" is a registered trademark of LG Corp.

ELECTRIC PREHEATER ACCESSORY

Wiring Diagram

Figure 37: DOAS / Pre-Heater Interlock Wiring Diagram.

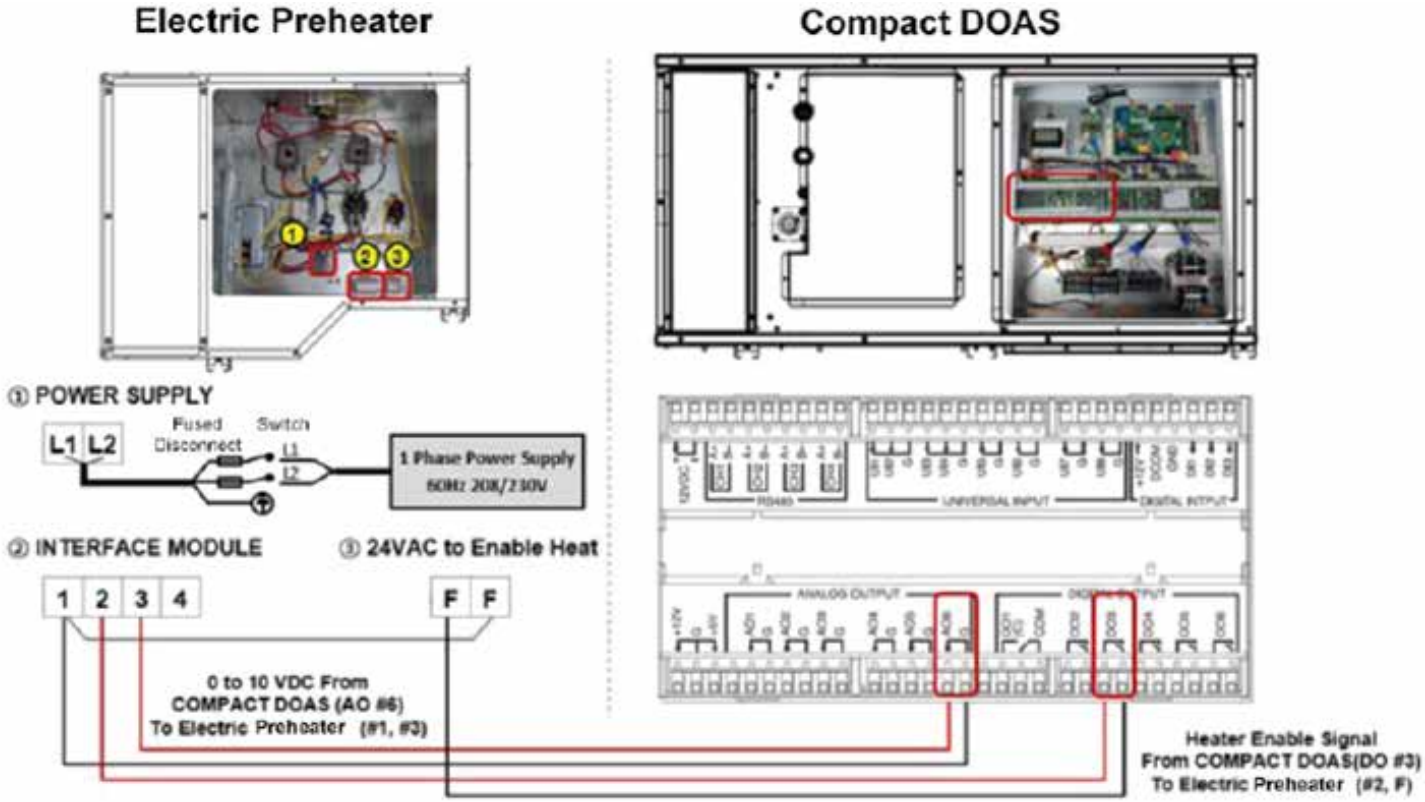

Due to our policy of continuous product innovation, some specifications may change without notification.
©LG Electronics U.S.A., Inc., Englewood Cliffs, NJ. All rights reserved. "LG" is a registered trademark of LG Corp.

Figure 38: Pre-Heater Internal Wiring Diagram.

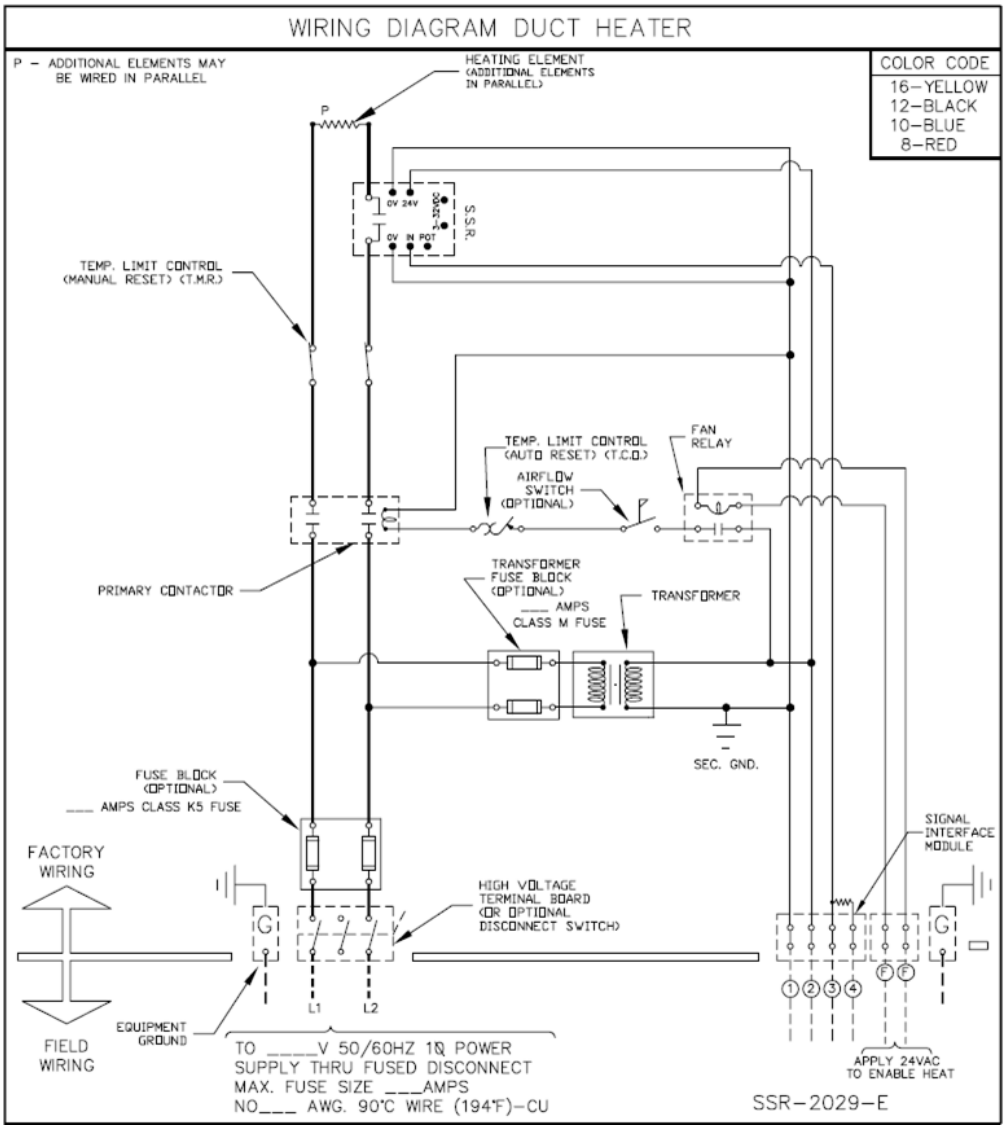

Due to our policy of continuous product innovation, some specifications may change without notification.
©LG Electronics U.S.A., Inc., Englewood Cliffs, NJ. All rights reserved. "LG" is a registered trademark of LG Corp.

ELECTRIC PREHEATER ACCESSORY

Installation Procedure

Installation Procedure

Step 1: Unpacking.

Move the container to the installation location before removing the protective materials.

Note:

If the unit is damaged after opening the container, repack the unit in the original packing material(s). RETAIN ALL PACKING MATERIALS. In general, freight damage claims will be denied if the original packing materials are not retained for the freight claim adjuster to inspect. Call your supervisor on how to proceed with filing a freight claim and to order a replacement unit. All freight damage claims must be made with the carrier within 30 days of shipment.

1. Before opening the packaging, inspect it for damage.
2. Remove the protective cardboard and top sheet and place to the side.
3. Remove the electric preheater from the shipping carton and inspect the box for freight damage.
4. Place the box right side up on a solid level surface.
5. Check the unit nameplate data and model number. Verify that it matches the label on the box and the submittal data.
6. Locate and retain the installation manual.

Step 2: Location Selection (Remote Mounted Installations Only).

If the electric preheater is to be installed in a remote location where it is not directly connected to the LG Compact DOAS unit, choose a location that conforms to the following:

Dos

- The structure will support the weight of the electric preheater.
- The structure allows the electric preheater to be easily hung in a level position.
- The structure provides proper clearance for removing and inserting filters.

⃠ Don't

Do not locate the structure near airborne sources such as grease, steam, excessive heat, flammable materials, salt, and acidic vapors that shorten filter life.

Step 3: Apply Duct Sealant.

Apply duct sealant on the outer side of four (4) flanges cross-hatched in the figure at right before attaching the electric preheater to the inlet of the LG Compact DOAS unit.

Figure 39: Location of Duct Sealant.

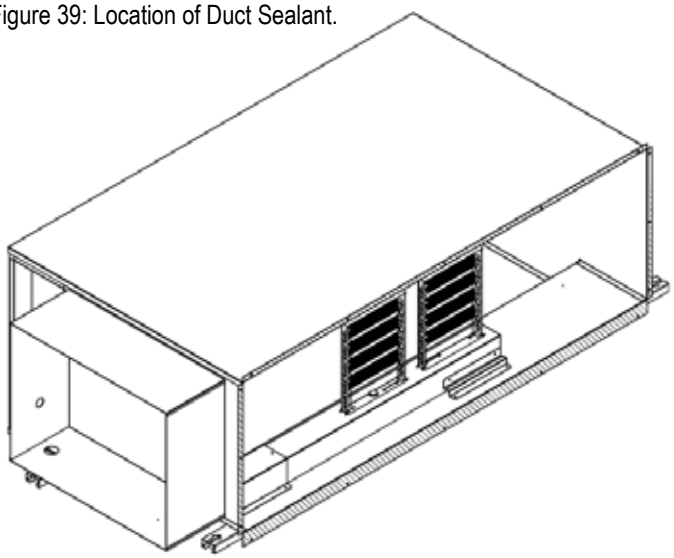

Due to our policy of continuous product innovation, some specifications may change without notification.
©LG Electronics U.S.A., Inc., Englewood Cliffs, NJ. All rights reserved. "LG" is a registered trademark of LG Corp.

Step 4: Connecting to the LG Split Compact DOAS.

Rear access is required to install the connecting screws. Connect the Compact DOAS unit to the Electric Preheater before connecting ductwork to the Electric Preheater inlet.

1. Remove the MERV 8 filters from the LG Split Compact DOAS and use them within the electric preheater.

⚠ NOTE

In case the Electric Preheater is directly connected to the Split Compact DOAS, be sure that the filters in the Split Compact DOAS are moved to the filter rack in the Electric Preheater. Failure to do so can burn the filters when the heater is activated.

Figure 40: Removing the MERV Filters.

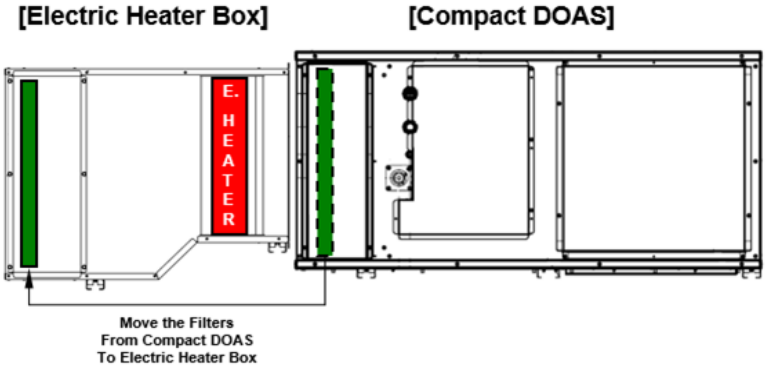

2. Accommodations have been made for screw head clearance on the electric preheater's mating and retain screws that secure it to the Split Compact DOAS unit (there are pre-punched holes for retaining screws).

Step 5: Wiring.

Avoid running the power wiring and communication cable alongside each other; there is a strong likelihood of operation malfunction due to electrostatic and electromagnetic interference. ⃠ Do not run both in the same conduit.

Note:

- ⃠ *Do not secure the power wiring and communication cables together. It will result in equipment malfunction.*
- ⃠ *Do not run the power wiring and the communication cable in the same conduit. It will result in equipment malfunction.*

Figure 41: Wiring the Electric Preheater.

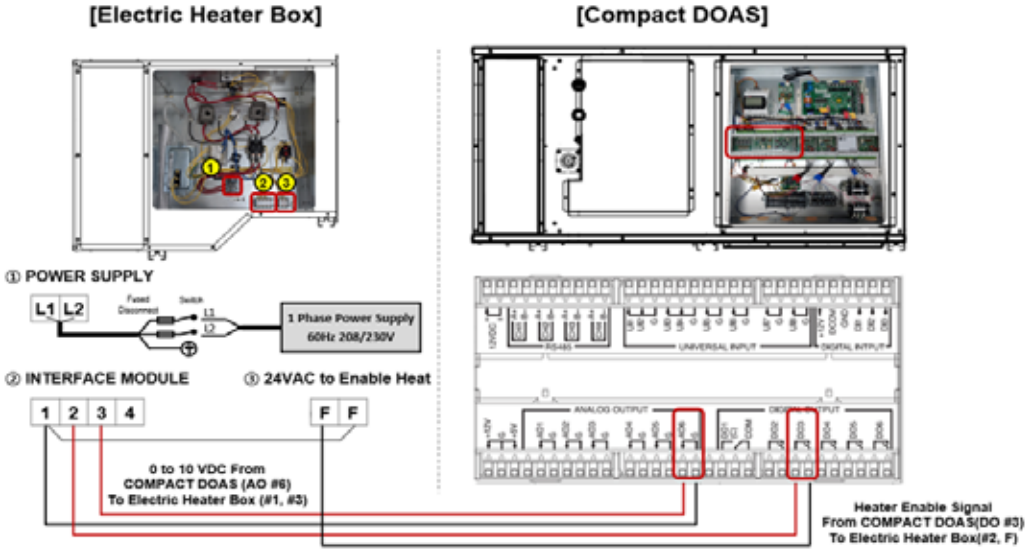

Due to our policy of continuous product innovation, some specifications may change without notification.
©LG Electronics U.S.A., Inc., Englewood Cliffs, NJ. All rights reserved. "LG" is a registered trademark of LG Corp.

ELECTRIC PREHEATER ACCESSORY

Installation Procedure

Step 6: Outside Air (OA) Sensor Installation (Field Mounted).

When installing the Electric Preheater, a third-party temperature sensor needs to be installed in order to detect the OA condition. The sensor should be installed in front the Electric Preheater (upstream). The OA sensor is to be field purchased and field installed. Use field-supplied 18 AWG, two-wire conductor to wire the electric preheater and temperature sensor.

Table 38: OA Temperature Sensor Terminations.

Space Temperature Sensor	
Type No. 1	NTC 10k
Terminal Strip TB @ NTC Module	RI3
	G

Sensor Installation

LG recommends: OA Temperature Sensor (NTC): MAMAC Systems Inc.® TE701/702*12*.

**12 indicates 10,000 ohm NTC Thermistor Type II.*

MAMAC Systems Inc.® is a trademark of MAMAC Systems Inc.

1. Remove the factory assembled sensor conductor at 'RI3' port and connect third-party sensor conductor at this port.
2. Third-party OA temperature sensor should be located in front of heater to detect OA condition.

Figure 42: Installing the Third-Party Sensor.

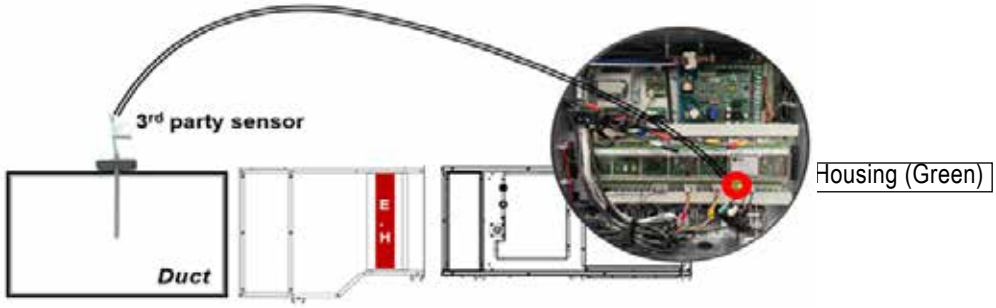

Figure 43: Access Hole Location.

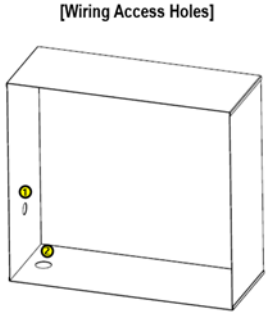

1. Communication Line (1-3/32")
2. Power Line (1-7/16")

Rigging Method

3. Using the support location dimensions provided on the cut-sheet as a template, install eight (8) hanger rods from a suitable building structural support (four [4] on the SPLIT COMPACT DOAS unit, and four [4] on the Electric Preheater).
4. Hang the chassis from the four (4) field-supplied threaded rod hangars. Refer to the threaded rod hangar details in the figure at right.
5. Use a level to ensure the chassis is level and securely tighten the mounting nuts.
6. If local code requires an auxiliary drain pan under the unit, install a field-provided drain pan.
7. Connect the ductwork to the unit as necessary.

Figure 44: Threaded Rod Hanger and Attaching Hardware.

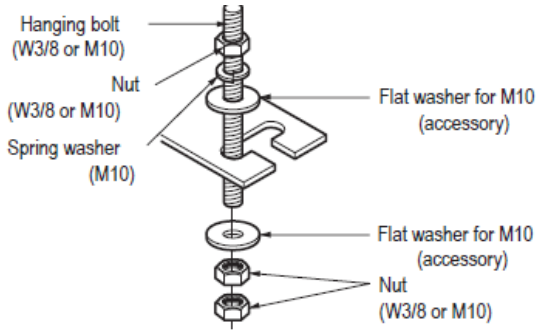

The following parts are field supplied:
- Hanging bolt - W-3/8" or 1/2"
- Nut - W-3/8" or M10
- Spring washer - M10

Included with the indoor unit:
- Flat washer - M10

Figure 45: Duct Heater that Connects to the Split Compact DOAS Inlet.

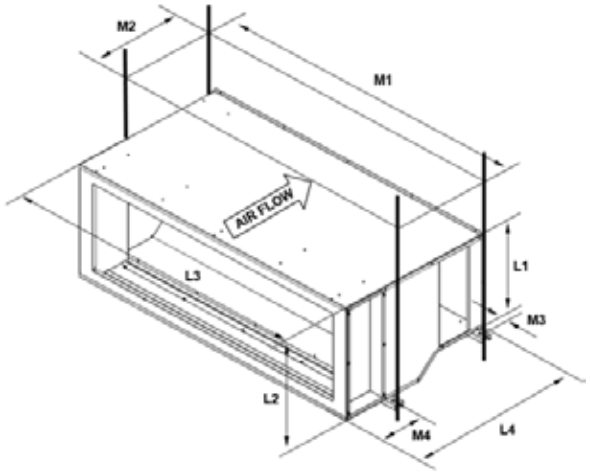

Table 39: Electric Heater Box Dimensions.

Model No.	Weight (lbs. w/no filters)	Major Dimensions (in.)				Mounting Dimensions (in.)			
		L1	L2	L3	L4	M1	M2	M3	M4
ZWPREHTR01, 10 kW	141	17-3/8	21-1/4	54-1/2	39-1/16	56-9/16	29-1/2	1-1/16	8-7/16
ZWPREHTR02, 20 kW	145								

Due to our policy of continuous product innovation, some specifications may change without notification.
©LG Electronics U.S.A., Inc., Englewood Cliffs, NJ. All rights reserved. "LG" is a registered trademark of LG Corp.

Sequence Setting

Figure 46: Electric Preheater Setting Schematic.

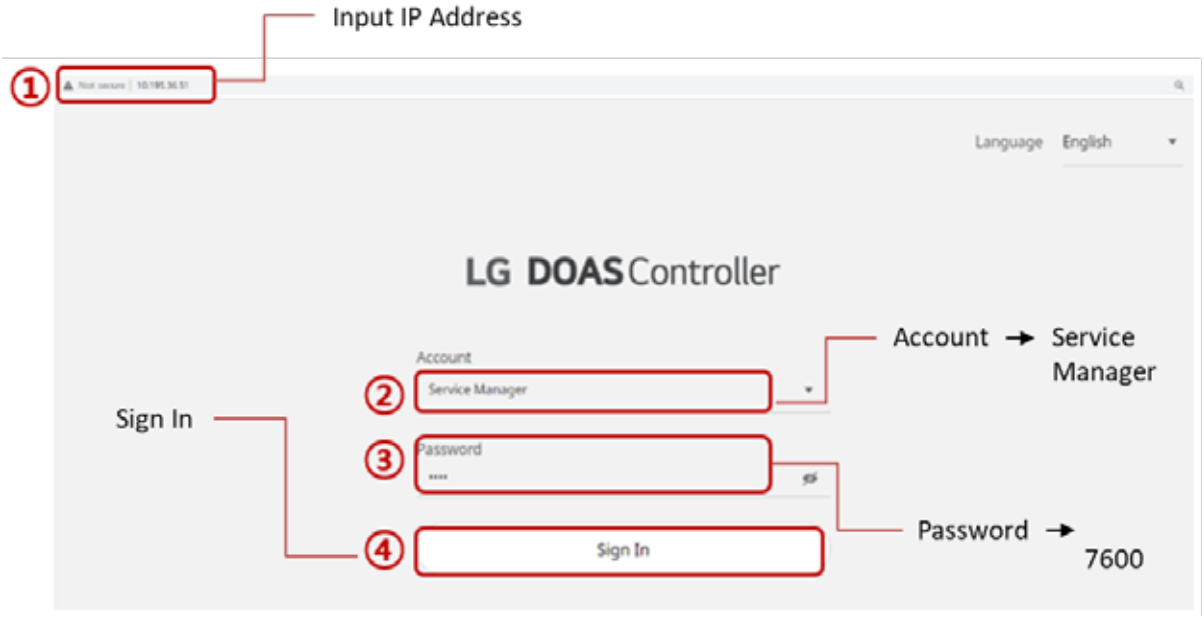

After installing the electric preheater, a heater setting is required.

1. Go to Service tab and select configuration.
2. Find the Preheat Heater Control section.
3. Select Installed Heater Capacity at the Heater Installation setting. Options are uninstalled, 10 kW Installed or 20 kW installed.
4. Set the heater enabling OA temperature and target mixed air (MA) temperature setpoint.

- OA Enabling Temperature: Heater will be enable below the setpoint. This value is adjustable between 5 ~ 23°F, and the factory default is 14°F.
- MA Setpoint: This setpoint will be used for achieving heater outlet temperature. This value is also adjustable (10 kW heater: 21.2 ~ 39.2°F, Default 30.2°F; 20 kW heater: 37.4 ~ 55.4°F, Default 46.4°F).

Figure 47: Preheat Heater Control Section (Step 2).

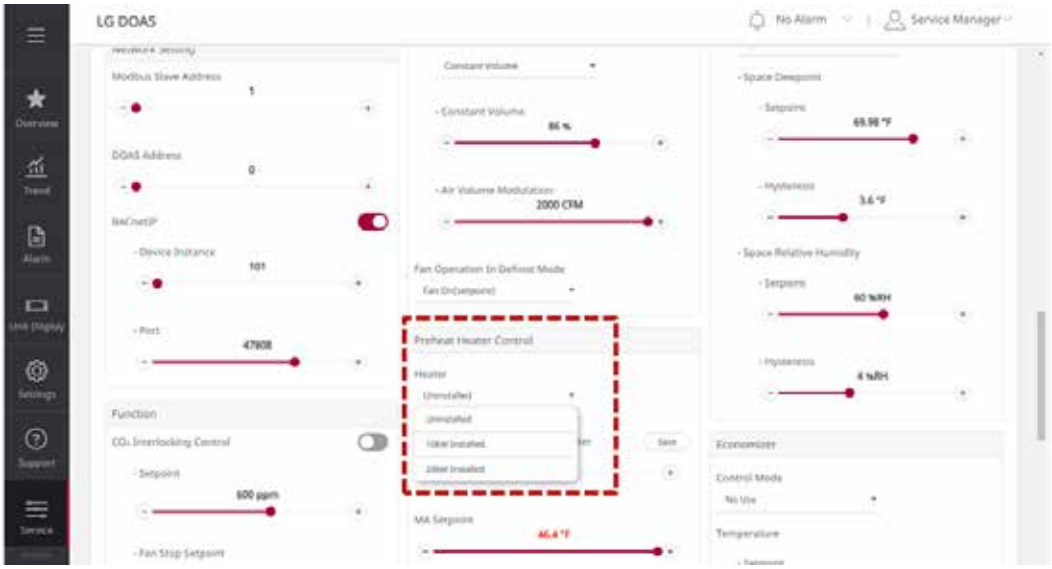

Due to our policy of continuous product innovation, some specifications may change without notification.
©LG Electronics U.S.A., Inc., Englewood Cliffs, NJ. All rights reserved. "LG" is a registered trademark of LG Corp.

ELECTRIC PREHEATER ACCESSORY

Sequence Setting

Setting Method, continued.

Figure 48: Installed Heater Capacity Section, 10 kW (Step 3).

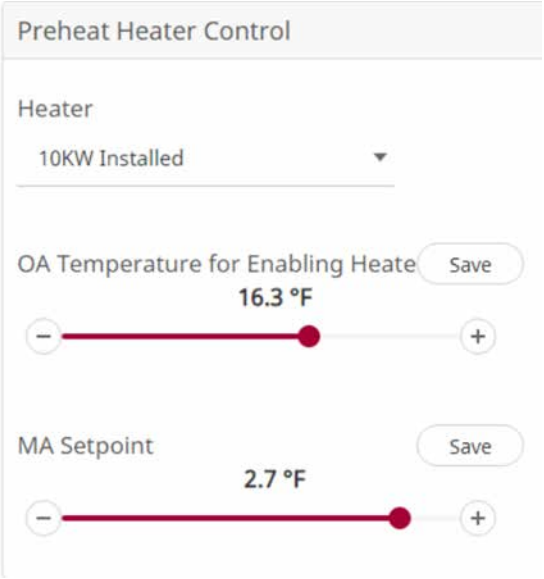

Figure 49: Installed Heater Capacity Section, 20 kW (Step 3).

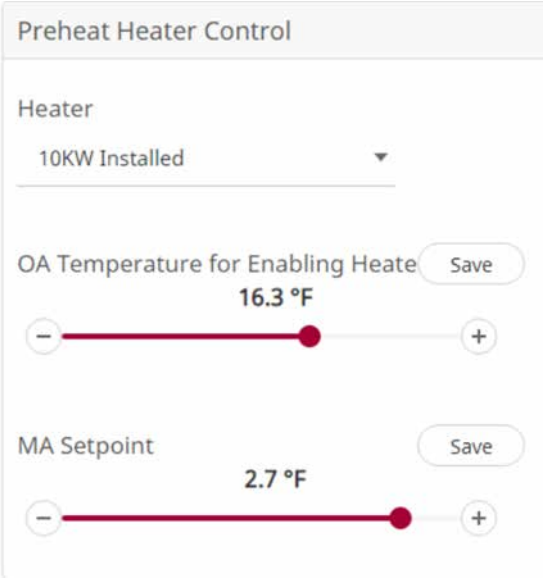

Figure 50: Target Mixed Air and Heater Enabling OA Temperature Section (Step 4).

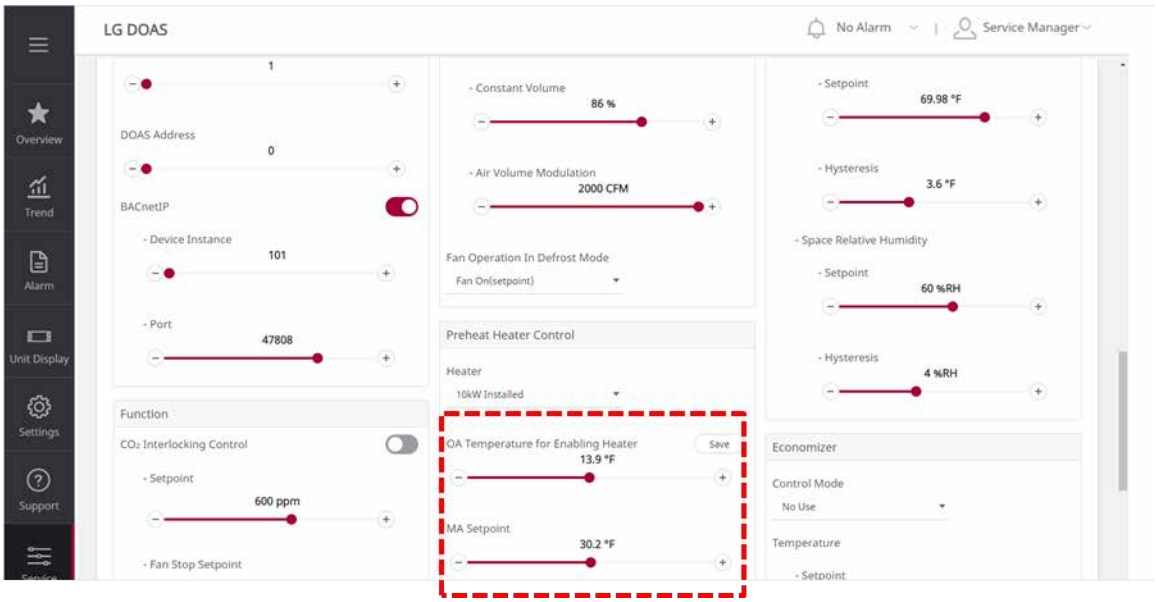

Due to our policy of continuous product innovation, some specifications may change without notification.
©LG Electronics U.S.A., Inc., Englewood Cliffs, NJ. All rights reserved. "LG" is a registered trademark of LG Corp.

Sequence of Output Electrical Heater Signal

Figure 51: Sequence of Output Electrical Heater Signal Diagram.

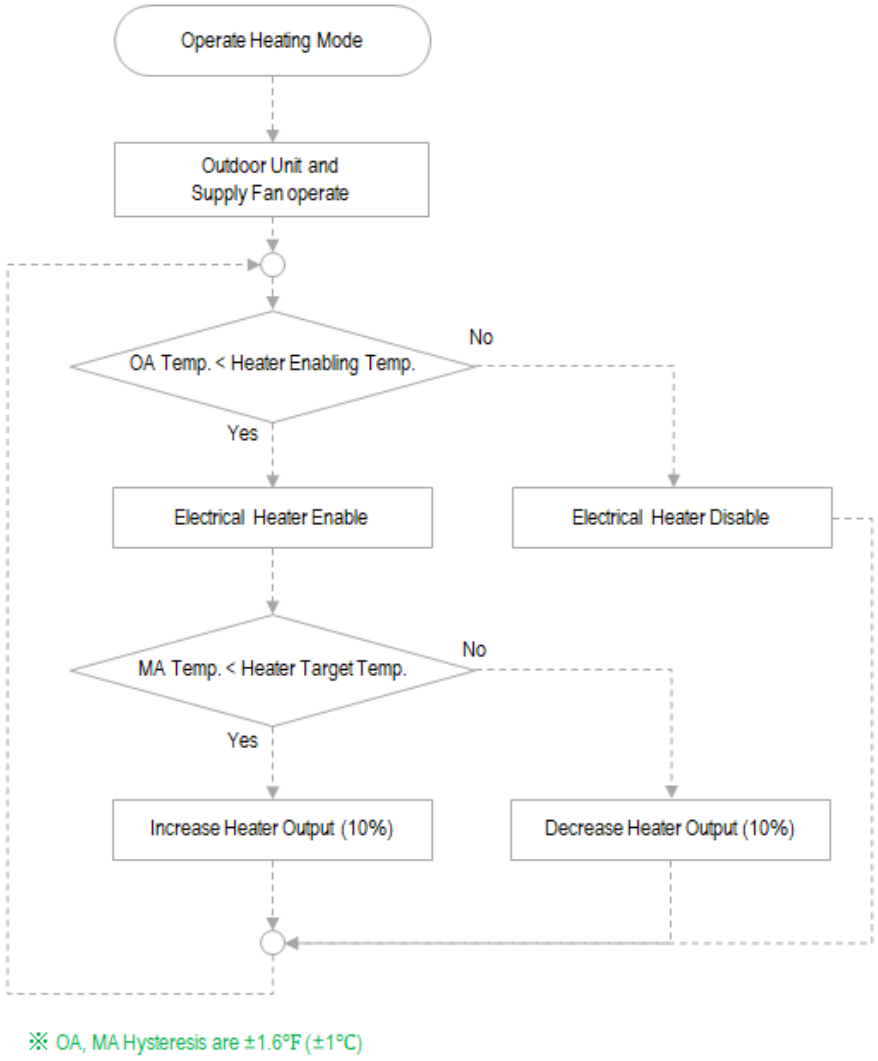

Heater Logic Setpoint

Table 40: Heater Logic Setpoint Table.

Heater	Heater Enable Setpoint (OA Temperature)	Heater (Power) Control Setpoint (MA Temperature)
10 kW	14°F	30.2°F
20 kW	14°F	46.4°F

- Setpoint for Heater Enable: 14°F (the setpoint can be adjusted within ±10°F).
- Setpoint for Heater (Power) Control: 30.2°F or 46.4°F (the setpoint can be adjusted within ±10°F).
- Every parameter logic follows hysteresis of ± 2°F.

Due to our policy of continuous product innovation, some specifications may change without notification.
©LG Electronics U.S.A., Inc., Englewood Cliffs, NJ. All rights reserved. "LG" is a registered trademark of LG Corp.

ELECTRIC PREHEATER ACCESSORY

Sequence Setting

Fan Only Mode Without Mechanical Cooling / Heating

• |Service| > |Configuration| >| Temperature Control| >| Fan Mode Temperature Hysteresis |.

It has been added to set mixed air temperature range for Fan Only mode.

The Fan Only mode will operate by itself if the mixed air temperature is within temperature set point ± Fan Mode temperature Hysteresis/2.

• Available Fan Mode Temperature Hysteresis setting range: Range: 0 ~ 20°F (0 ~ 10°C) – Default 0°F (0°C).

• If the setting value is “0”, then Fan Mode is going to be disabled.

Figure 52: Fan Only Mode.

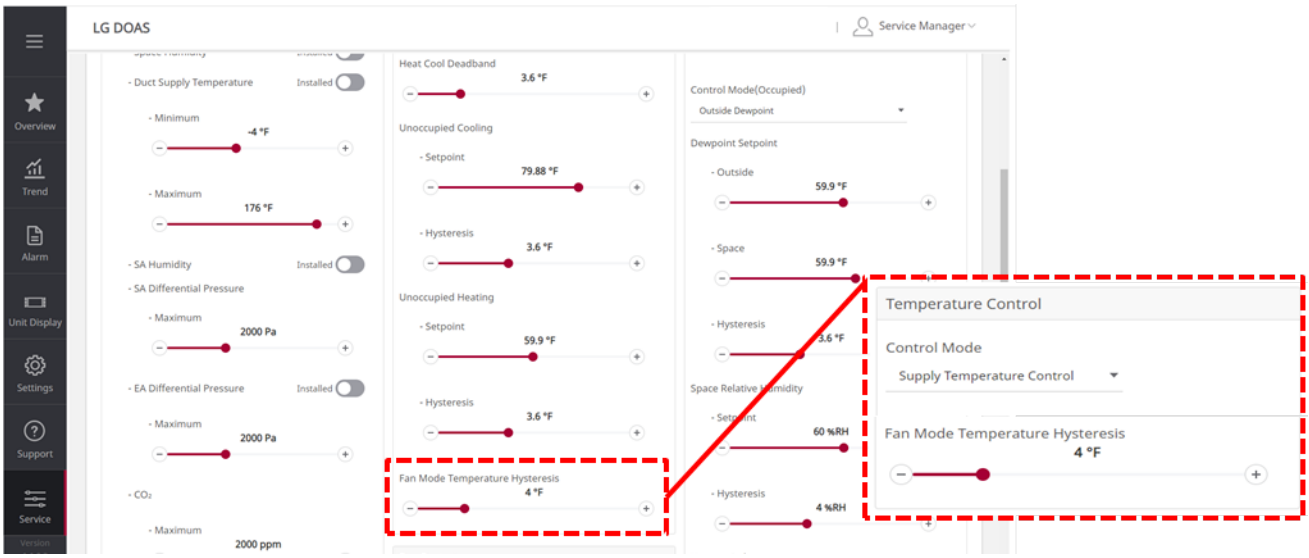

Figure 53: Fan Only Mode Setpoint.

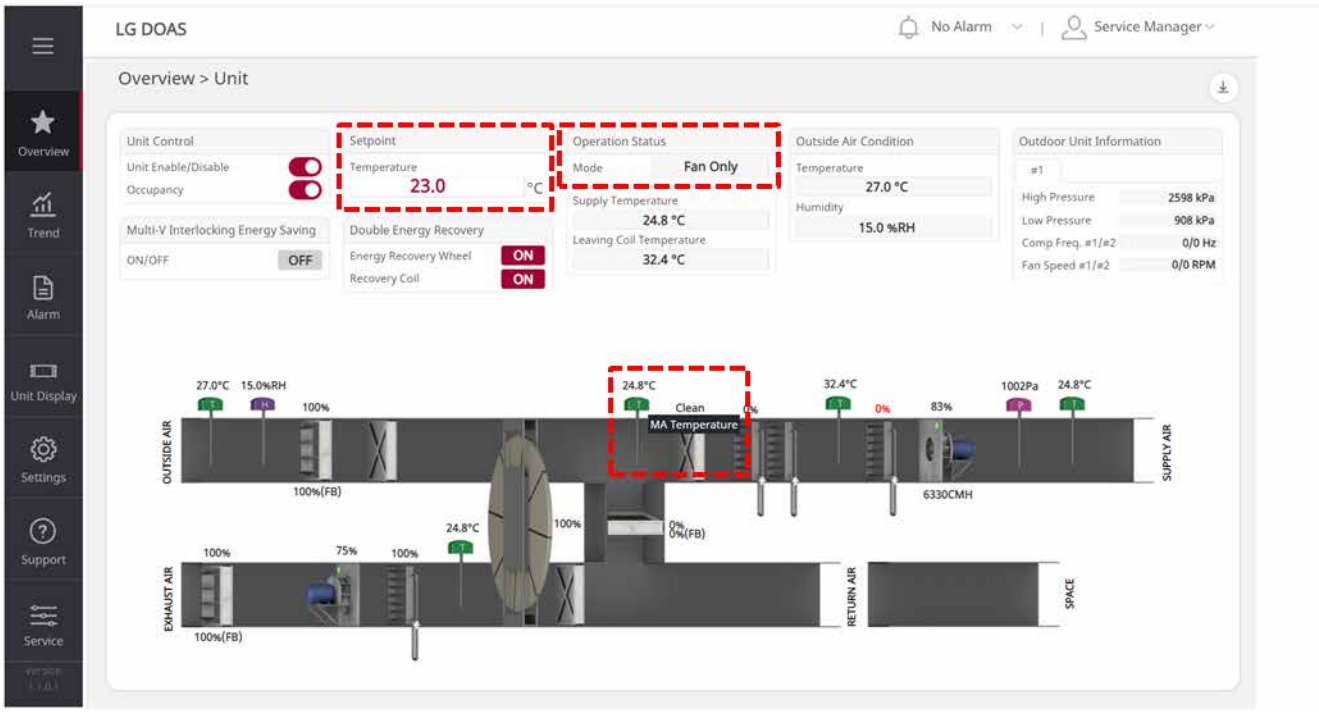

Due to our policy of continuous product innovation, some specifications may change without notification.
©LG Electronics U.S.A., Inc., Englewood Cliffs, NJ. All rights reserved. “LG” is a registered trademark of LG Corp.

Fan Mode Operation

Figure 54: Fan Mode Operation Diagram.

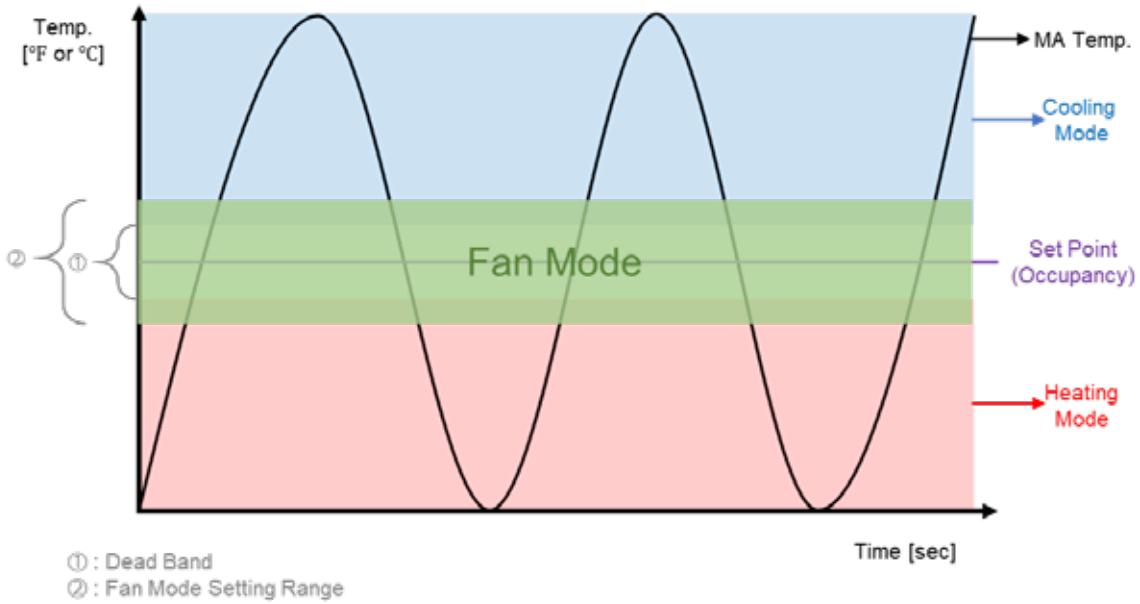

BMS Sensor Override Function

- |Service| > |Configuration| >| Sensor Override By BMS |.

It has been added to enable the DOAS sensor override by BMS.

- Space temperature, Space Humidity, CO2 Concentrations sensor, Supply temperature, Supply Humidity Sensor can be overridden by BMS.

Figure 55: BMS Sensor Override Function.

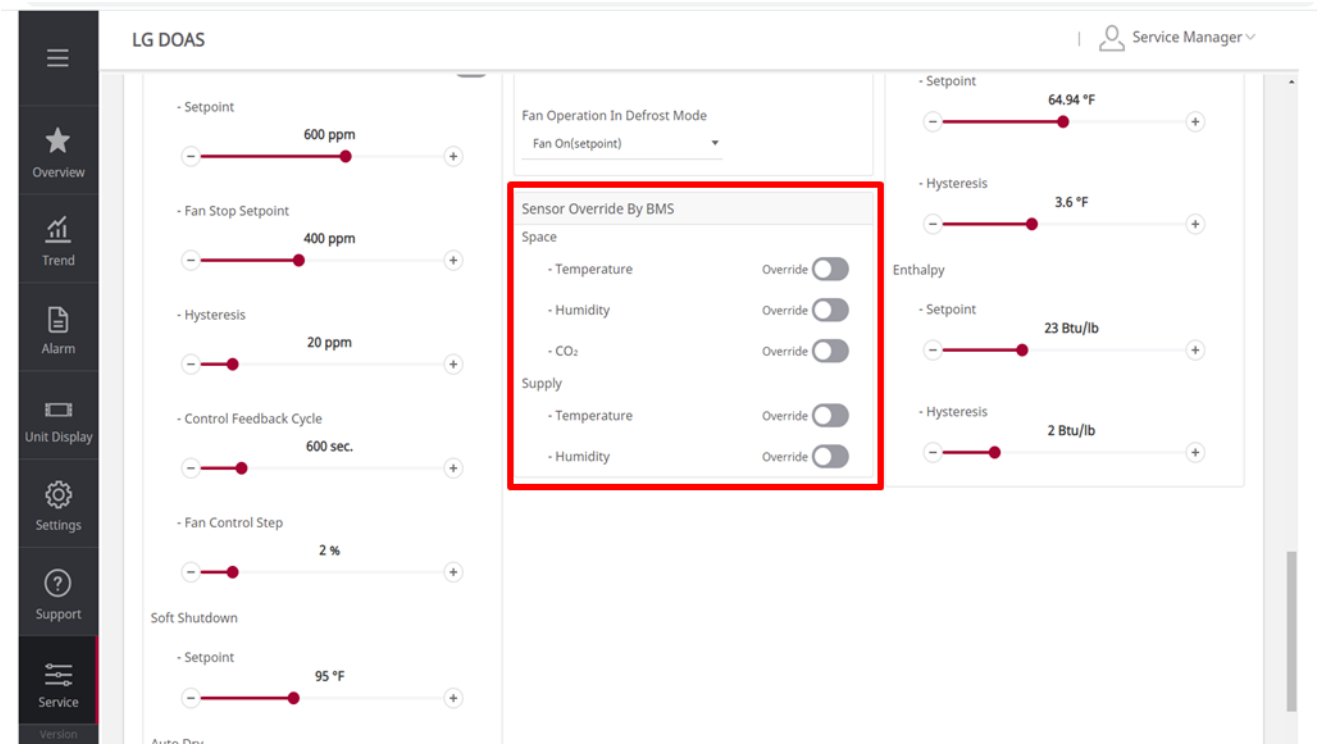

Due to our policy of continuous product innovation, some specifications may change without notification.
©LG Electronics U.S.A., Inc., Englewood Cliffs, NJ. All rights reserved. "LG" is a registered trademark of LG Corp.

CONTROLLER

Overview / Electrical Specifications / Connecting to the Web UI

Overview

All DOAS units are equipped with a fully programmed, microprocessor-based controller that is responsible for unit operation; monitoring inputs and regulating outputs to maintain unit operation. The controller includes:

- Unit-specific controls sequence.
- Component safeties and alarms.
- Ethernet RJ-45 network port.
- MODBUS® protocol to connect to AC Smart and ACP (Modbus is a registered trademark of Schneider Electric, licensed to the Modbus Organization, Inc.).
- Points and system settings can be manipulated through a computer operating Web UI software.

The controller also provides user feedback through an optional hand-held keypad / display (hardwired), or can be connected to a building management system interface.

Figure 56: LG DOAS Controller (CAREL + LG Controller).

Figure 57: Web User Interface.

Electrical Specifications

The DOAS controller receives 24 VAC (CAREL®) and 12 VDC (LG) power from a transformer on the main control panel, and is energized when the main disconnect is on.

CAREL is a registered trademark of CAREL INDUSTRIES in Italy and/or other countries.

Connecting to the Web UI

To use the Web UI and access the controller from a computer, tablet, or smart phone connected to the local area network, enter the controller's IP address into the device's web browser.

1. Using a standard CAT5 Ethernet cable, connect the computer to the controller at the Ethernet port connection as shown in the figure.
2. Open a web browser (Internet Explorer® or Chrome® browsers are supported). (Internet Explorer is a registered trademark of Microsoft Corporation. Chrome is a registered trademark of Google LLC.)
3. Type in IP address 192.168.1.101 (factory-configured).

Figure 58: Connecting to the Web UI.

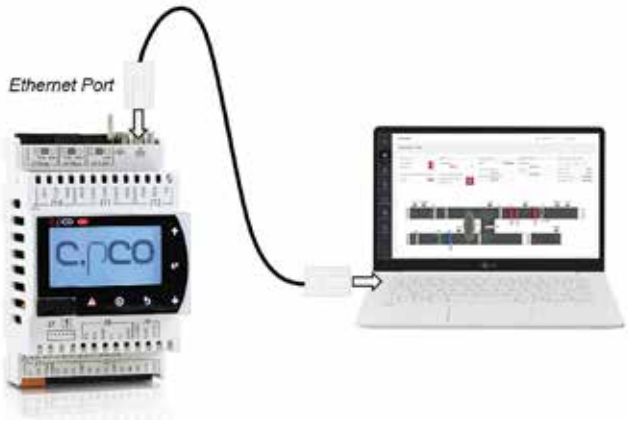

Due to our policy of continuous product innovation, some specifications may change without notification.
©LG Electronics U.S.A., Inc., Englewood Cliffs, NJ. All rights reserved. "LG" is a registered trademark of LG Corp.

Service Password

A service password is required to change or enter certain settings. To obtain service-level access:

1. Go to Main > Ctrl Variables > Advanced > Login > Password.
2. Change password “0000” to “7600”.
3. Menu displayed with “S” in the upper left hand corner.

The letters “B”, “S” and “M” are displayed in the upper left hand corner, depending on the authority required for the set screen. “B” is all user accessible, “S” is service manager / installer, “M” is manufacturer only.

Startup Settings

Most controller settings are factory configured, however, the settings described below must be defined before unit startup. Service-level access is required to enter or change these settings. See the “Service Password” section above.

- Time and Date: Go to the Main > Settings > Date Time > Date/Time Change screen.
- Time Zone: Go to the Main > Settings > Date Time > Timezone screen.
- Altitude: Go to the Main > Ctrl Variables > Advanced > Unit Setting screen.
- IP Address: Go to the Main > Settings > Network Settings screen.
- BMS / AC Smart Communication: Go to the Main > Ctrl Variables > Advanced > Network Settings screen to set up network communication. To communicate with ACP/AC Smart, MODBUS Sub Address must be set and ACP / AC Smart should be set to “MODBUS” protocol.

IP Address

The controller’s IP address must be unique within it TCP / IP network. The controller may have a DHCP server-assigned address or a manually assigned static IP address. IP addresses are configured at the factory as follows:

- DHCP: Off
- Subnet mask: 255.255.255.0
- DNS: 0.0.0.0
- IP address: 192.168.1.101
- Gateway: 192.168.1.1

The controller’s default address may need to be changed. This address can be set manually at the Main > Settings > Network > Network Configuration screen. A service password is required to change this setting.

DOAS Unit Address Settings

LG DOAS can be connected up to a maximum of four (4) units on a Multi V 5 heat recovery outdoor unit system. If more than two (2) DOAS units are installed, the DOAS / heat recovery unit (integral part of the Split Compact DOAS) addresses must match. Factory set value is 0.

Figure 59: Address Settings in a Multiple DOAS Application.

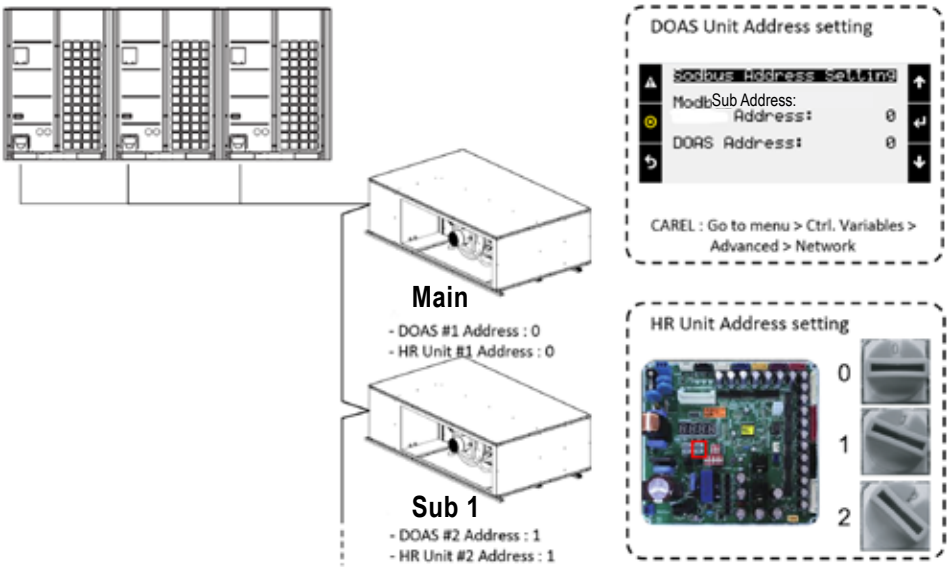

Due to our policy of continuous product innovation, some specifications may change without notification.
©LG Electronics U.S.A., Inc., Englewood Cliffs, NJ. All rights reserved. “LG” is a registered trademark of LG Corp.

CONTROLLER

Central Controller Setting

Central Controller Setting

Note:

Only AC Smart 5 / ACP 5 or later must be used with the DOAS controller.

1. Confirm control wiring between DOAS controller and AC Smart 5 Channel 1 or ACP 5 Channel 6. (Wiring is 18 AWG, 2-conductor, twisted, stranded, shielded, and must comply with all applicable local and national codes.)

Figure 60: DOAS Controller to Central Controller Connections.

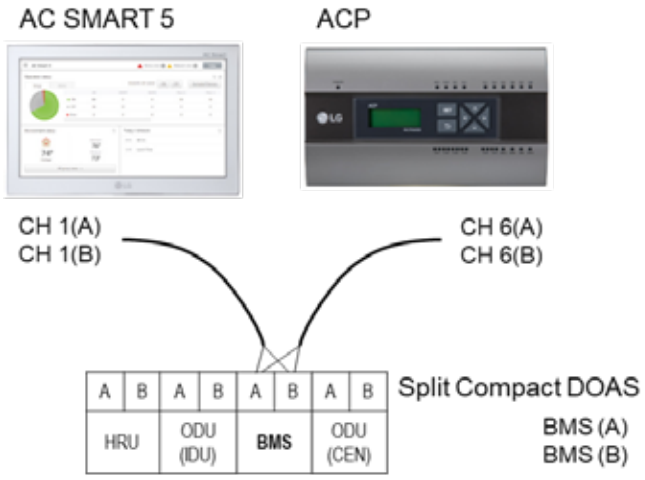

2. On the CAREL controller, under “SVC > Configuration > Network Setting” set the “Modbus Sub Address” as (For ARND**DC DOAS models):

• CAREL Modbus SubAddress = 18 (Hex)
• AC Smart or ACP Address = 12 (Hex)

Figure 61: Device I.D. Screen.

Due to our policy of continuous product innovation, some specifications may change without notification.
©LG Electronics U.S.A., Inc., Englewood Cliffs, NJ. All rights reserved. “LG” is a registered trademark of LG Corp.

AC Smart / ACP Controller Setup

1. Under the AC Smart / ACP "Settings" tab, find and click on "Installing".

2. AC Smart: Press on the "AC Smart [00]" tab, go to "Registration Status", and change the CH1 setting to "MODBUS_9600".
   ACP: Press on the "ACP [00]" tab and change the CH6 setting to "MODBUS_9600".

3. Click "Auto Search" to find the devices connected to the controller.

4. After the search is complete, click "Send All".
   Units can be added by clicking "Add Unit", and then clicking on the buttons next to the name(s) of the applicable devices. After all necessary units are selected, click "Apply".

5. Click "Send All" to finish adding the device(s).

Figure 62: Clicking "Installing" Under the AC Smart / ACP "Settings" Tab (Step 1).

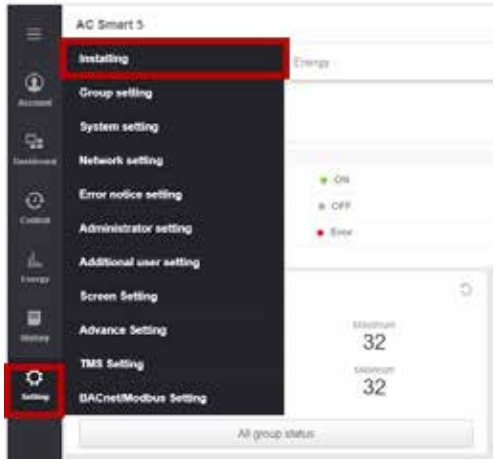

Figure 63: Changing CH1 Setting to "MOD-BUS_9600" (Step 2).

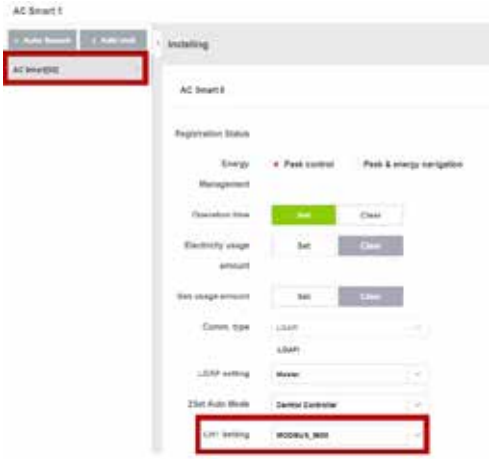

Figure 64: Clicking "Auto Search" (Step 3).

Figure 65: Clicking "Send All" (Step 4).

Figure 66: Adding Units (Step 4).

Figure 67: Clicking "Send All" to Finish Adding Devices (Step 5).

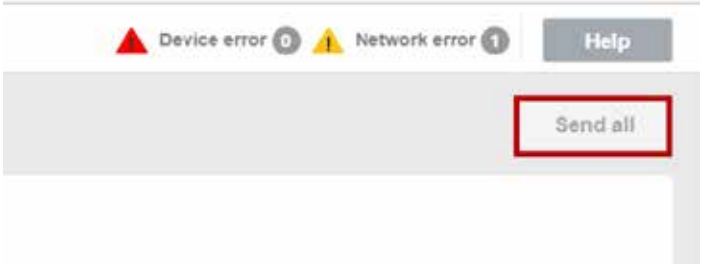

Due to our policy of continuous product innovation, some specifications may change without notification.
©LG Electronics U.S.A., Inc., Englewood Cliffs, NJ. All rights reserved. "LG" is a registered trademark of LG Corp.

CONTROLLER

AC Smart / ACP Controller Setup

AC Smart / ACP Controller Setup, continued.

6. Under the AC Smart / ACP “Control” tab, find and select “Device Control”.

7. Find the “Installation” tab and select “AC Smart” or “ACP”. A list of devices available for view will appear in the middle of the screen.

8. Click on the device to be viewed. A new section will appear on the right side of the screen. Click “View Details”.

9. A detailed picture of the unit will be displayed. Click on “Info” to review information on the unit, such as the model, address, mode, temperature, etc.

Figure 68: Clicking on “Device Control” (Step 6).

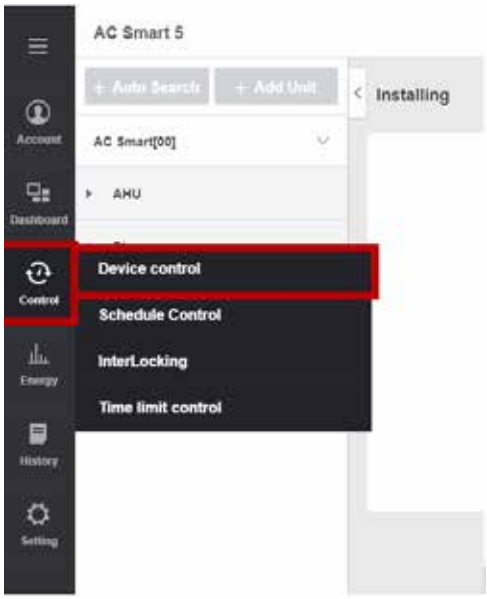

Figure 69: Selecting “AC Smart” (Step 7).

Figure 70: Selecting “View Details” (Step 8).

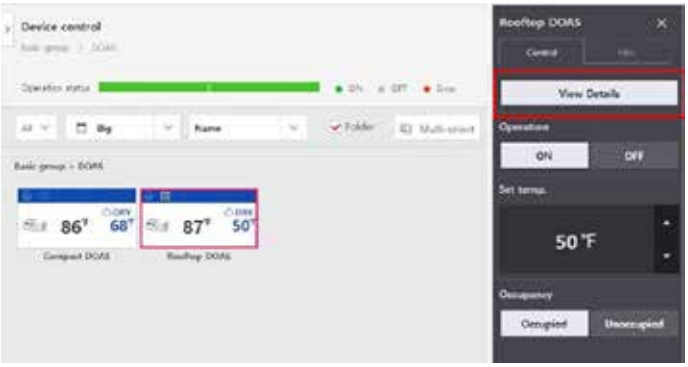

Figure 71: Selecting “Info” (Step 9).

Due to our policy of continuous product innovation, some specifications may change without notification.
©LG Electronics U.S.A., Inc., Englewood Cliffs, NJ. All rights reserved. “LG” is a registered trademark of LG Corp.

AC Smart / ACP Controller Setup, continued.

BMS Configuration

Figure 72: BMS Configuration (BACnet IP).

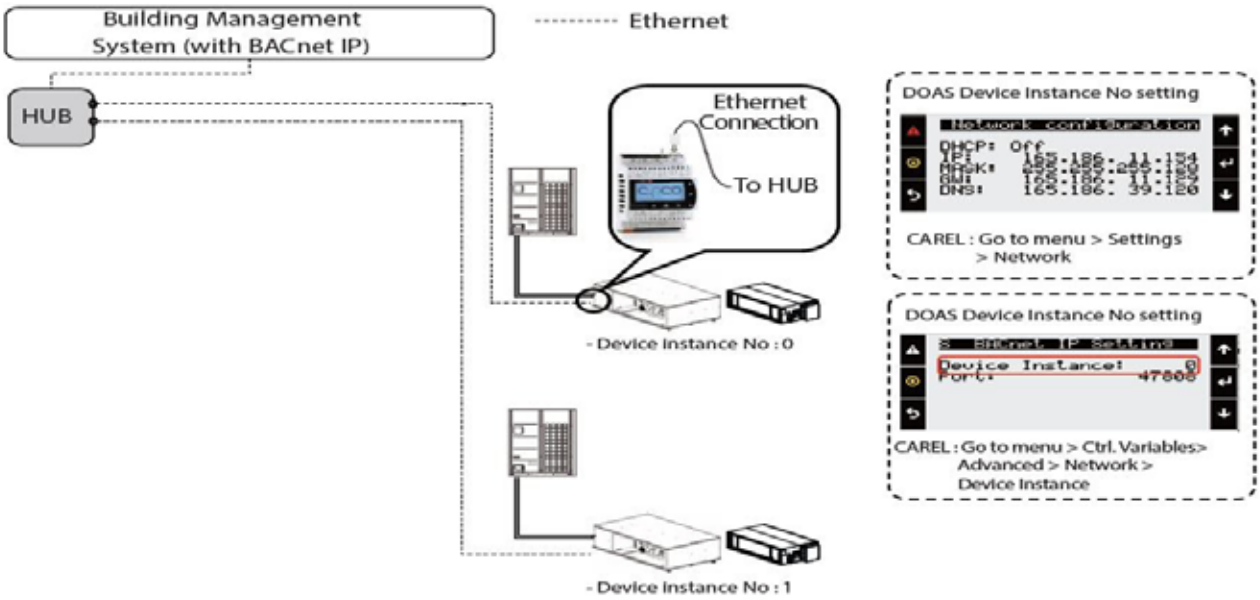

Figure 73: BMS Configuration (MODBUS).

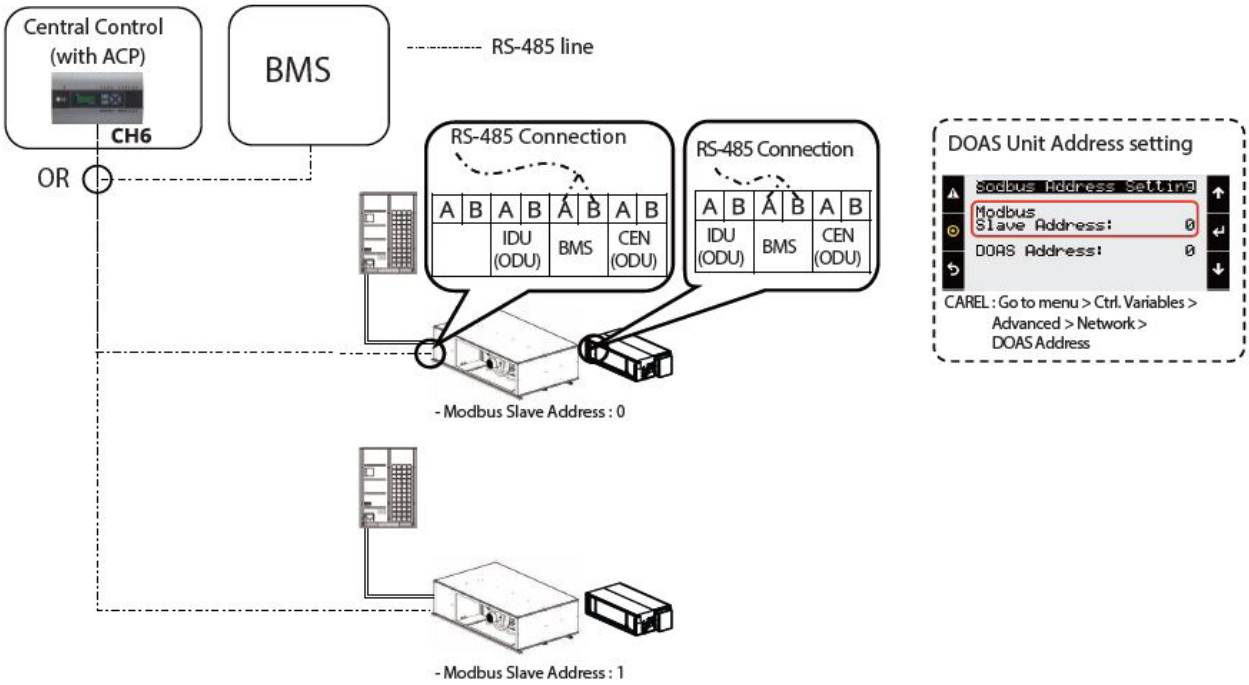

Due to our policy of continuous product innovation, some specifications may change without notification.
©LG Electronics U.S.A., Inc., Englewood Cliffs, NJ. All rights reserved. "LG" is a registered trademark of LG Corp.

CONTROLLER

Main Control Board Terminal Connections /

CAREL Control Board Terminal Connections

Main Control Board Terminal Connections

Identifying Input and Output Terminals

The following terminal markings are on the control boards and indicate:

- DI: Digital Inputs (DC: Normal Close / DO: Normal Open)
- DO: Digital Outputs (DC: Normal Close / DO: Normal Open)
- AI : Analog Inputs
- AO: Analog Outputs
- UI : Universal Inputs
- UO : Universal Outputs
- RI : Resistance Input

CAREL Control Board Terminal Connections

- See image below for general board layout.
- See the tables on the following pages for standard terminal connection points.
- See the wiring schematics shipped with the unit for factory-configured terminal connection points for all units.

Figure 74: CAREL Control Board Layout.

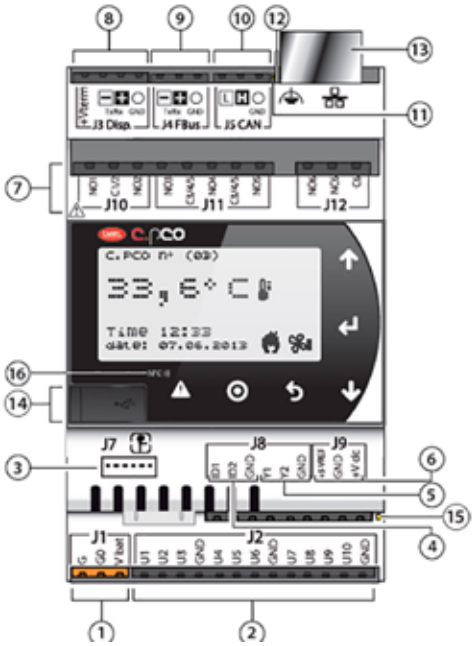

Legend	Description	Remark
1	Power supply connectors [G(+), G0(-), Vbat]	-
2	Universal inputs/outputs	Unassigned
3	Valve Unipolar connector	Unassigned
4	DI: digital inputs free contact	Unassigned
5	Analogue outputs	Unassigned
6	+VDC: alimentazione per sonde attive +5V power supply for raziometric probes	Unassigned
7	Relay digital outputs	Unassigned
8	External terminal or BMS or Fieldbus connector +Vterm: terminal power supply	Remote Display Connection
9	FieldBus connector	Communication with LG Controller
10	CANBus connector	Unassigned
11	CANBus communication LED	Unassigned
12	Faston for Ethernet earth connection	-
13	Ethernet connection	-
14	microUSB port	-
15	Power supply LED	-
16	Antenna NFC	Unassigned

Due to our policy of continuous product innovation, some specifications may change without notification.
©LG Electronics U.S.A., Inc., Englewood Cliffs, NJ. All rights reserved. "LG" is a registered trademark of LG Corp.

LG Control Board Layout

Main Module

Figure 75: Main Module.

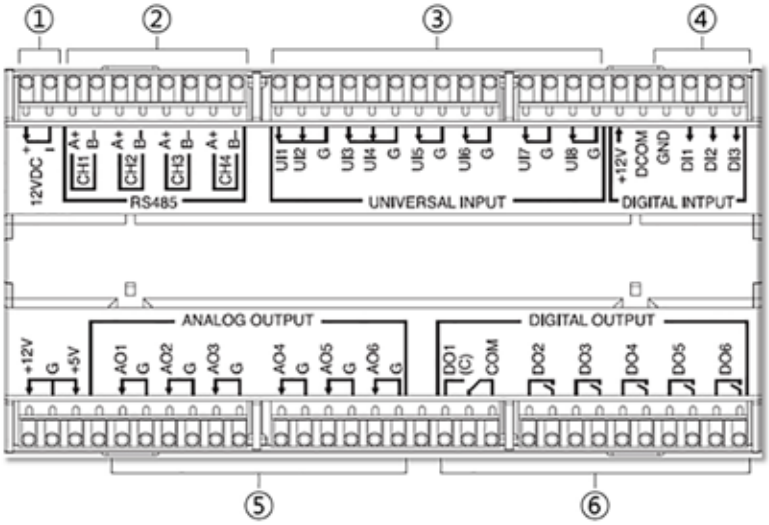

Drawing Reference	Description
1	Power supply connectors [12Vdc +, -]
2	Universal inputs
3	UI: Universal inputs
4	DI: Digital inputs
5	Analogue outputs
6	Digital outputs
7	Power supply Connectors [12+, G, 5+]

Table 41: Main Module Component Details.

Drawing Reference	Terminal	Unit Connection	Type	Position Indicates	Range
2	CH1	CAREL J4 Field Bus Connector (For Communication with CAREL)	RS-485		
	CH2	RS-485 communication with other Module's CH1	RS-485		
	CH3	CEN_Bus A&B (To Outdoor Unit)	RS-485		
	CH4	BMS_Bus A&B (To Outdoor Unit)	RS-485		
3	UI1	Unassigned	0 – 10Vdc		
	UI2	Outdoor Air Humidity	0 – 10Vdc		0~100%
	UI3	Supply Air Temperature (Field Option)	0 – 10Vdc		-130-210°F
	UI4	Supply Air Relative Humidity (Field Option)	0 – 10Vdc		0~100%
	UI5	Differential Pressure Sensor (For SA flow rate monitoring and CFM Modulation)	0 – 10Vdc		0-30"wc
	UI6	Unassigned			
	UI7	Unassigned			
	UI8	Space CO_2 Sensor (Field Option)	0 – 10Vdc		0-3,000ppm
4	DI1	Forced Stop		NC (Open = Unit Stop)	
	DI2	Unit On / Off		NO (Closed = Unit On)	
	DI3	Float Switch		NC (Open = Unit Stop)	
5	AO1	OA Damper (Field Option)	0-10Vdc		0~100%
	AO2	Unassigned			
	AO3	RA Damper (Field Option)	0-10Vdc		0~100%
	AO4	Unassigned			
	AO5	Unassigned			
	AO6	Heater Output Signal (Field Option)	0-10Vdc		0~100%
6	DO1	DO1-COM Error Status		NO (Closed = Alarm)	
		(C) - COM	C type	NC (Open = Alarm)	
	DO2	On / Off Status		NO (Closed= Unit On[1])	
	DO3	Heater Enable Signal (Field Option)		NO (Closed: Enable Signal On)	
	DO4	Drain Pump		NO (Closed= Pump On)	
	DO5	Main Coil Bypass Valve		NO (Closed= Valve Open)	Open/Close
	DO6	Solenoid Valve (Reheat Coil)		NO (Closed= Valve Open)	Open/Close

[1]If the fan is operating, it indicates as Unit ON.

Due to our policy of continuous product innovation, some specifications may change without notification.
©LG Electronics U.S.A., Inc., Englewood Cliffs, NJ. All rights reserved. "LG" is a registered trademark of LG Corp.

CONTROLLER

UI Module

UI Module

Figure 76: UI Module.

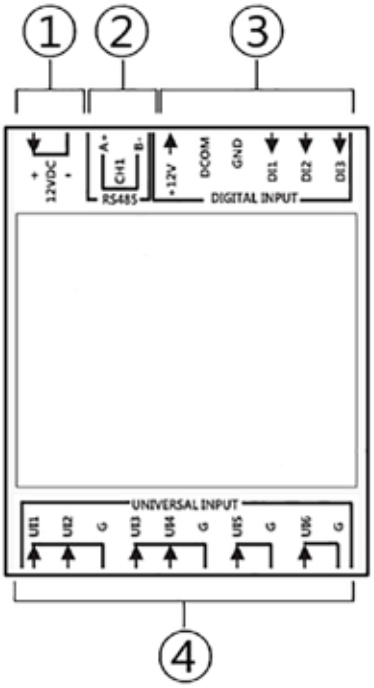

Drawing Reference	Description
1	Power supply connectors [12Vdc +, -]
2	RS 485 Communication
3	DI: Digital inputs
4	UI: Universal inputs

Table 42: UI Module Component Details.

Drawing Reference	Label	Unit Connection	Type	Position Indicates	Range
2	CH1	CH1 port of Other module for communication	RS-485		
3	DI1	Occupancy		NO (Closed = Occupied)	
	DI2	Outside Air Filter Switch		NO (Closed = Dirty)	
	DI3	Unassigned		NO (Closed = Dirty)	
4	UI1	Unassigned			
	UI2	Unassigned			
	UI3	Unassigned			
	UI4	Unassigned			
	UI5	Space / Return Duct Temperature (Field Option)	0 – 10Vdc		-130-210°F
	UI6	Space / Return Duct Relative Humidity (Field Option)	0 – 10Vdc		-130-210°F

Due to our policy of continuous product innovation, some specifications may change without notification.
©LG Electronics U.S.A., Inc., Englewood Cliffs, NJ. All rights reserved. "LG" is a registered trademark of LG Corp.

NTC Module

Figure 77: NTC Module.

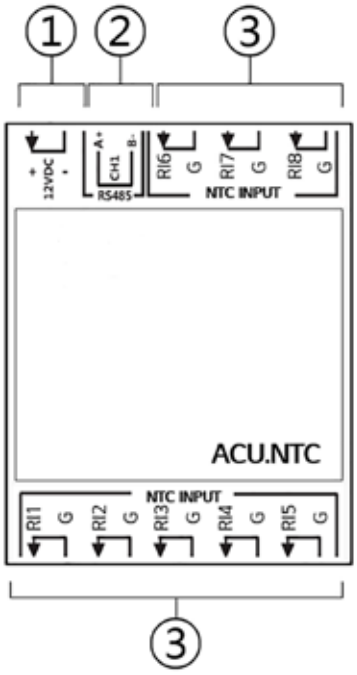

Drawing Reference	Description
1	Power supply connectors [12Vdc +, -]
2	RS 485 Communication
3	NTC input

Table 43: NTC Module Component Details.

Drawing Reference	Label	Unit Connection	Sensor Type	Position Indicates	Range
2	CH1	CH1 port of Other module for communication	RS-485		
3	RI1	Space / Return Duct Temperature (Field Option)	NTC 10k		-130-210°F
	RI2	Unassigned	NTC 10k		-130-210°F
	RI3	Outdoor Air Temperature	NTC 10k		-130-210°F
	RI4	Leaving Air Temperature (Main Coil) #1	NTC 10k		-130-210°F
	RI5	Leaving Air Temperature (Main Coil) #2	NTC 10k		-130-210°F
	RI6	Unassigned	NTC 10k		-130-210°F
	RI7	Supply Air Temperature	NTC 10k		-130-210°F
	RI8	Outdoor Air Temperature After Wheel	NTC 10k		-130-210°F

Due to our policy of continuous product innovation, some specifications may change without notification.
©LG Electronics U.S.A., Inc., Englewood Cliffs, NJ. All rights reserved. "LG" is a registered trademark of LG Corp.

CONTROLLER

EEV Module

EEV Module

Figure 78: EEV Module.

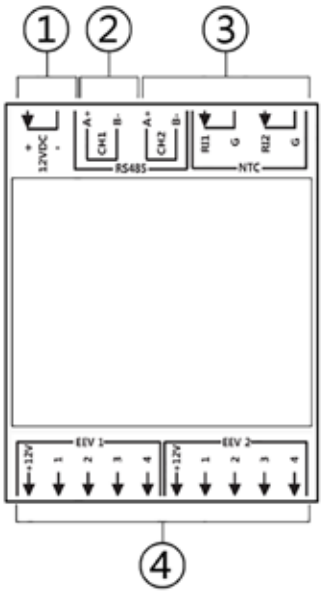

Drawing Reference	Description
1	Power supply connectors [12Vdc +, -]
2	RS 485 Communication
3	NTC input
4	EEV (Electric Expansion Valve)

Table 44: EEV Module Component Details No. 1 (Main Coil No. 1).

Drawing Reference	Label	Unit Connection	Type	Position Indicates	Range
2	CH1	CH1 port of other module for communication	RS-485		
	CH2	IDU_Bus_A&B (To Outdoor Unit)	RS-485		
3	RI1	Main Coil #1 Refrigerant temperature (Pipe In)	NTC 5k		-130-210°F
	RI2	Main Coil #1 Refrigerant temperature (Pipe out)	NTC 5k		-130-210°F
4	EEV1	Unassigned			
	EEV2	Main Coil No. 1 EEV	Step Control		0 - 1,350

Table 45: EEV Module Component Details No. 2 (Reheat Coil).

Drawing Reference	Label	Unit Connection	Type	Position Indicates	Range
2	CH1	CH1 port of other module for communication	RS-485		
	CH2	IDU_Bus_A&B	RS-485		
3	RI1	Reheat Coil Refrigerant temperature (Pipe In)	NTC 5k		-130-210°F
	RI2	Reheat Coil Refrigerant temperature (Pipe out)	NTC 5k		-130-210°F
4	EEV1	Unassigned			
	EEV2	Reheat Coil EEV	Step Control		0 - 1,350

Due to our policy of continuous product innovation, some specifications may change without notification.
©LG Electronics U.S.A., Inc., Englewood Cliffs, NJ. All rights reserved. "LG" is a registered trademark of LG Corp.

Navigation

The function buttons for the keypad / display and the virtual keypad / display and Web UI configuration described in the table below.

Figure 79: Virtual Keypad.

Figure 80: Virtual Configuration.

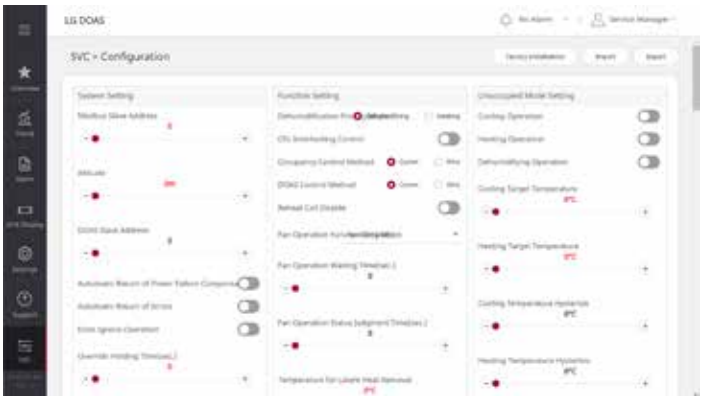

Login with Service Manager > SVC > Configuration.

Table 46: Function Buttons for the Keypad / Display and the Virtual Keypad / Display.

Button	Description	Functions
	Main Menu (target button)	Navigates directly to the Main Menu from any screen. Backlight indicates that the unit is enabled. From the Main Menu, navigate to the following screens (see also the Menu map section): • Unit Enable • Unit Status • Control Variables • Alarm Menu
	Alarm	The Alarm button flashes when there is an active alarm. Press to view active alarms. Press twice to go to the alarms reset screen.
	Escape	Access from the Main Menu to view the Unit Status screen. Press to navigate one menu level back. Press when editing a variable to cancel editing.
	Up	Navigates through the menus / screens. Press after entering a variable to increase a current value.
	Enter	Press to enter a highlighted menu or screen item. Press to enter a writable variable, and press again to confirm the new variable value.
	Down	Press to navigate menus / screens. Press after entering a variable to decrease the current value.
2 Button Click 2 Button Hold		These two buttons on the virtual keypad / display simulates two-button actions on the handheld keypad / display. To simulate pressing two buttons simultaneously: 1. Click on 2-Button Click. 2. Sequentially click two keypad buttons (Main, Alarm, Escape, Up, Enter, Down). To simulate pressing and holding two buttons simultaneously: 1. Click on 2-Button Hold. 2. Sequentially click two keypad buttons (Main, Alarm, Escape, Up, Enter, Down).

Due to our policy of continuous product innovation, some specifications may change without notification.
©LG Electronics U.S.A., Inc., Englewood Cliffs, NJ. All rights reserved. "LG" is a registered trademark of LG Corp.

CONTROLLER

Navigation

Main Status Screen

The Main Status screen displays current operating information. This screen includes:

- Header Line: The header line alternates between the job name and unit tag. If there are active alarms, the number of active alarms is displayed instead of the job information.
- Unit Status Line: System startup information and unit operation status appears here.
- Four Quadrants: These quadrants have information that may change every three (3) seconds, depending on options and sensors installed:
  - Upper Left Quadrant: Displays the current value of the primary control variable. For example, this could be supply air temperature, room air temperature, return air temperature, or coil leaving temperature.
  - Upper Right Quadrant: Displays all temperature and humidity values that pertain to the air handler.
  - Lower Left Quadrant: Displays the set-point that corresponds to the primary control variable in the upper left quadrant and may rotate through other set-points.
  - Lower Right Quadrant: Displays animated symbols that represent current unit operation (symbols described in the table below).

Figure 81: Main Status Screen.

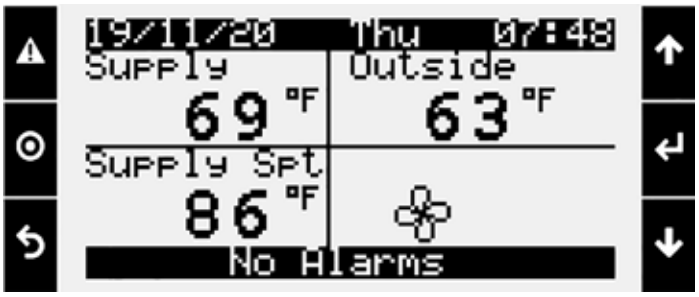

Table 47: Main Status Screen Lower Right Quadrant Symbols.

Button / Symbol	Description
	Supply air fan status. Rotation indicates airflow; static blades indicate no airflow.
	Cooling
	Heating
	Economizing
	Dehumidifying
	Defrost

Due to our policy of continuous product innovation, some specifications may change without notification.
©LG Electronics U.S.A., Inc., Englewood Cliffs, NJ. All rights reserved. "LG" is a registered trademark of LG Corp.

Main Menu Navigation

The Menu Map shows screen order when using either the Handheld Keypad or the Virtual Keypad / Display on the web interface. See the Navigation section for instructions about moving through menu screens.

Figure 82: Menu Map.

Main Menu

Unit Enable	Unit Status	Ctrl Variables		Alarm Menu	Settings
	Overview	Occupancy		Active Alarms	Date Time
	Occupancy Status	Temperature Control		Alarm History	Unit of Measure
	Outside Air Conditions	Dehumidification		Alarm Export	Network
	Space Conditions	Fan Control	Supply Fan Control		Password
	Supply Setpoint		Exhaust Fan Control		Initialization
	Active Setpoint	Economizer			Application Info
	HGRH Ramp	CO_2 Interlock			DOAS Model Set
	Dehumidification	Advanced	Unit Config		
	Damper Commanded Pos		Advanced Ctrl		
	Supply Fan Status		Heater Setting		
	Exhaust Fan Status		Damper Setting		
	Energy Recovery Wheel		Sensor Setting		
	Recovery Coil		Network		
	Economizer Ramp		Login		
	CO_2 Ramp Output				
	Refrigerant Status1				
	Refrigerant Status2				

Due to our policy of continuous product innovation, some specifications may change without notification.
©LG Electronics U.S.A., Inc., Englewood Cliffs, NJ. All rights reserved. "LG" is a registered trademark of LG Corp.

Software Update

Connecting to USB Driver

The controller has built-in USB ports for connecting to USB drives. The USB drives can be used for backing up all settings and reported conditions such as alarm history and current values.

Note:

When uploading the wrong file type, an error could occur and the software will remain at the previous version.

Update Process

1. Prepare the USB. Create a new folder “UPGRADE” in USB Driver and copy the file to “UPGRADE” folder.
2. Connect the USB.
3. Go to the System Menu using two-button click (three [3] to five [5] seconds).
4. Go to the UPGRADE menu > Press “Enter”.
5. Check the software file that will be uploaded > Press “Enter”.
6. Press “Enter” to start the upgrade.
7. After uploading, press “Enter” and then the controller will restart.
8. Software version check:

• CAREL Controller Display / Virtual Display
• Go to Main > Unit Enable > Settings > Application Info.

Figure 83: Uploading the Software.

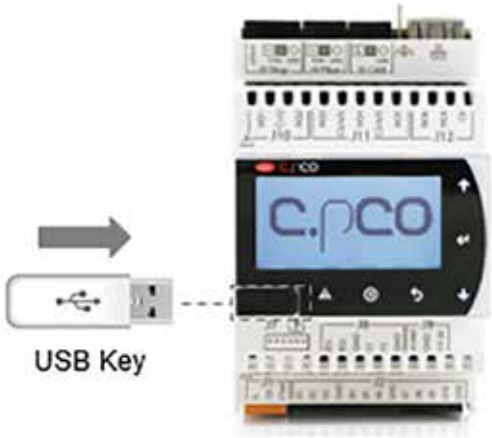

Figure 84: Uploading the Software (Step 4).

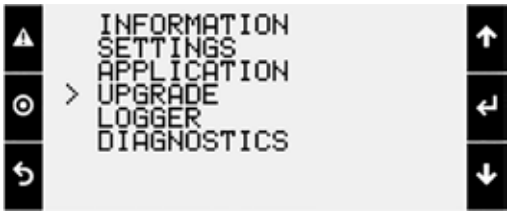

Figure 85: Checking the Software File (Step 5).

Figure 86: Starting the Upgrade (Step 6).

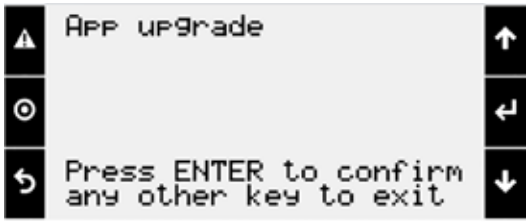

Figure 87: Restarting the Controller (Step 7)

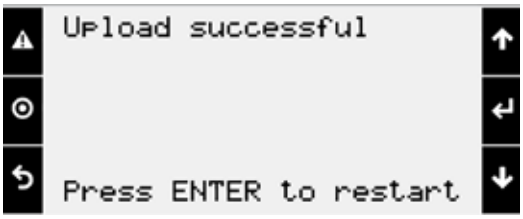

Figure 88: Checking the Software Version (Step 8).

Figure 89: Web User Interface (Step 8)

Due to our policy of continuous product innovation, some specifications may change without notification.
©LG Electronics U.S.A., Inc., Englewood Cliffs, NJ. All rights reserved. “LG” is a registered trademark of LG Corp.

Table 48: BACnet / Modbus Object List for DOAS Units Table.

Variable	Description	BACNET				MODBUS			
		Object Type	Instance No.	Access	COV Incre.	Index	Register Type	Size	x 0.1 Req.
Input Register									
I000_MainModule_SW_Version	Main Module Software Version	Analog Input	0	Read_NoWrite		30001	InputRegister	2	○
I001_MainModuleErrorCode	Error Code	Integer Value	1	Read_NoWrite		30002	InputRegister	2	
I010_OperationMode	DOAS Operating Mode	Positive Integer Value	10	ReadCOV_NoWrite	1	30011	InputRegister	2	
I019_TemperatureOfCoolingChange	Cooling Mode Entering Condition	Analog Input	19	Read_NoWrite		30020	InputRegister	2	○
I020_TemperatureOfHeatingChange	Heating Mode Entering Condition	Analog Input	20	Read_NoWrite		30021	InputRegister	2	○
I021_ActiveSetpoint	Setpoint of Current Operation Mode	Analog Input	21	ReadCOV_NoWrite	0.5	30022	InputRegister	2	○
I030_OATemperature	Outside Air Temperature	Analog Input	30	ReadCOV_NoWrite	0.5	30031	InputRegister	2	○
I031_OAHumidity	Outside Air Relative Humidity	Analog Input	31	ReadCOV_NoWrite	1	30032	InputRegister	2	○
I034_SpaceTemperature	Space Air Temperature	Analog Input	34	ReadCOV_NoWrite	0.5	30035	InputRegister	2	○
I035_SpaceHumidity	Space Air Relative Humidity	Analog Input	35	ReadCOV_NoWrite	1	30036	InputRegister	2	○
I036_SATemperature	Supply Air Temperature	Analog Input	36	ReadCOV_NoWrite	0.5	30037	InputRegister	2	○
I037_SAHumidity	Supply Air Relative Humidity	Analog Input	37	ReadCOV_NoWrite	1	30038	InputRegister	2	○
I038_CoilTemperature	Main Coil Leaving Air Temperature	Analog Input	38	Read_NoWrite		30039	InputRegister	2	○
I039_MATemperature	After Wheel Air Temp. (Supply Air Stream)	Analog Input	39	Read_NoWrite		30040	InputRegister	2	○
I040_EATemperature	Exhaust Air Temperature	Analog Input	40	ReadCOV_NoWrite	0.5	30041	InputRegister	2	○
I041_CO2	Space CO_2 value	Positive Integer Value	41	Read_NoWrite		30042	InputRegister	2	
I042_SAFlowDiffPressure	Differential Pressure Value	Positive Integer Value	42	Read_NoWrite		30043	InputRegister	2	
I043_EAFlowDiffPressure	Differential Pressure Value, if equipped	Positive Integer Value	43	Read_NoWrite		30044	InputRegister	2	
I046_OADewpoint	Outside Air Dew Point	Analog Input	46	Read_NoWrite		30047	InputRegister	2	○
I047_OAEnthalpy	Outside Air Enthalpy	Analog Input	47	Read_NoWrite		30048	InputRegister	2	○
I050_SpaceDewpoint	Space Air Dew Point	Analog Input	50	Read_NoWrite		30051	InputRegister	2	○
I051_SpaceEnthalpy	Space Air Enthalpy	Analog Input	51	Read_NoWrite		30052	InputRegister	2	○
I052_SADewpoint	Supply Air Dew point	Analog Input	52	Read_NoWrite		30053	InputRegister	2	○
I053_SAEnthalpy	Supply Air Enthalpy	Analog Input	53	Read_NoWrite		30054	InputRegister	2	○
I062_MainCoil1InTemperature	Refrigerant Inlet Temp. of Main Coil #1	Analog Input	62	Read_NoWrite		30063	InputRegister	2	○
I063_MainCoil1OutTemperature	Refrigerant Outlet Temp. of Main Coil #1	Analog Input	63	Read_NoWrite		30064	InputRegister	2	○
I064_MainCoil2InTemperature	Refrigerant Inlet Temp. of Main Coil #2	Analog Input	64	Read_NoWrite		30065	InputRegister	2	○
I065_MainCoil2OutTemperature	Refrigerant Outlet Temp. of Main Coil #2	Analog Input	65	Read_NoWrite		30066	InputRegister	2	○
I066_ReheatCoilInTemperature	Refrigerant Inlet Temp. of Reheat Coil	Analog Input	66	Read_NoWrite		30067	InputRegister	2	○
I067_ReheatCoilOutTemperature	Refrigerant Outlet Temp. of Reheat Coil	Analog Input	67	Read_NoWrite		30068	InputRegister	2	○
I068_RecoveryCoilInTemperature	Refrigerant Inlet Temp. of Recovery Coil	Analog Input	68	Read_NoWrite		30069	InputRegister	2	○
I069_RecoveryCoilOutTemperature	Refrigerant Outlet Temp. of Recovery Coil	Analog Input	69	Read_NoWrite		30070	InputRegister	2	○
I070_OADamperOpenRate	Opening Position of Outside Air Damper	Positive Integer Value	70	ReadCOV_NoWrite	1	30071	InputRegister	2	
I071_EADamperOpenRate	Opening Position of Exhaust Air Damper	Positive Integer Value	71	ReadCOV_NoWrite	1	30072	InputRegister	2	
I072_MA_RADamperOpenRate	Opening Position of Recirculation Air Damper	Positive Integer Value	72	ReadCOV_NoWrite	1	30073	InputRegister	2	

Due to our policy of continuous product innovation, some specifications may change without notification.
©LG Electronics U.S.A., Inc., Englewood Cliffs, NJ. All rights reserved. "LG" is a registered trademark of LG Corp.

CONTROLLER

BACnet / Modbus Object List

Table 49: BACnet / Modbus Object List for DOAS Units Table, continued.

Variable	Description	BACNET				MODBUS			
		Object Type	Instance No.	Access	COV Incre.	Index	Register Type	Size	x 0.1 Req.
Input Register, continued									
I073_SAFanOperationRate	Supply Fan Motor Speed (%)	Positive Integer Value	73	ReadCOV_NoWrite	1	30074	InputRegister	2	
I074_EAFanOperationRate	Exhaust Fan Motor Speed (%)	Positive Integer Value	74	ReadCOV_NoWrite	1	30075	InputRegister	2	
I075_ERWOperationRate	Energy Recovery Wheel Motor Speed (%) by Cycle Period	Positive Integer Value	75	ReadCOV_NoWrite	1	30076	InputRegister	2	
I076_MainCoilOperationRate	Target Pressure Adjustment Value (%) by Cycle Period	Positive Integer Value	76	ReadCOV_NoWrite	1	30077	InputRegister	2	
I077_ReheatCoilOperationRate	Reheat Coil EEV Adjustment Value (%) by Cycle Period	Positive Integer Value	77	ReadCOV_NoWrite	1	30078	InputRegister	2	
I078_PreheatCoilOperationRate	Electric Heater	Positive Integer Value	78	Read_NoWrite		30079	InputRegister	2	
I079_RecoveryCoilOperationRate	Recovery Coil EEV Adjustment Value (%) by Cycle Period	Positive Integer Value	79	ReadCOV_NoWrite	1	30080	InputRegister	2	
I080_TargetHighPressure	Target High Pressure of Outdoor Unit	Positive Integer Value	80	Read_NoWrite		30081	InputRegister	2	
I081_TargetLowPressure	Target Low Pressure of Outdoor Unit	Positive Integer Value	81	Read_NoWrite		30082	InputRegister	2	
I084_ReheatCoilEEVPulse	Reheat Coil EEV Pulse Value	Positive Integer Value	84	Read_NoWrite		30085	InputRegister	2	
I086_SAFanFlowVolume	Supply Air Flow Rate	Positive Integer Value	86	ReadCOV_NoWrite	2	30087	InputRegister	2	
I087_EAFanFlowVolume	Exhaust Air Flow Rate (if Differential Pressure Sensor is Equipped)	Positive Integer Value	87	ReadCOV_NoWrite	2	30088	InputRegister	2	
I9004_ODU1_HighPressureTrace	ODU Main High Pressure	Positive Integer Value	9004	Read_NoWrite		39005	InputRegister	2	
I9005_ODU1_LowPressureTrace	ODU Main Low Pressure	Positive Integer Value	9005	Read_NoWrite		39006	InputRegister	2	
I9012_ODU1_Inv1Trace	ODU Main Inverter #1 Compressor Hz	Positive Integer Value	9012	Read_NoWrite		39013	InputRegister	2	
I9014_ODU1_Inv2Trace	ODU Main Inverter #2 Compressor Hz	Positive Integer Value	9014	Read_NoWrite		39015	InputRegister	2	
I9015_ODU1_Fan1Trace	ODU Main Fan#1 RPM	Positive Integer Value	9015	Read_NoWrite		39016	InputRegister	2	
I9016_ODU1_Fan2Trace	ODU Main Fan#1 RPM	Positive Integer Value	9016	Read_NoWrite		39017	InputRegister	2	
I9023_ODU1_AirTemp	ODU Main Ambient Temperature	Analog Input	9023	Read_NoWrite		39024	InputRegister	2	○
I9024_ODU1_SuctionTemp	ODU Main Suction Pipe Refrigerant Temp.	Analog Input	9024	Read_NoWrite		39025	InputRegister	2	○
I9025_ODU1_CondeseTemp	ODU Main Condenser Refrigerant Temperature	Analog Input	9025	Read_NoWrite		39026	InputRegister	2	○
I9026_ODU1_EvaporateTemp	ODU Main Evaporator Refrigerant Temperature	Analog Input	9026	Read_NoWrite		39027	InputRegister	2	○
I9036_ODU1_Inv1IPMTemp	ODU Main Inverter #1 Heat-Sink Temperature	Analog Input	9036	Read_NoWrite		39037	InputRegister	2	
I9037_ODU1_Inv2IPMTemp	ODU Main Inverter #2 Heat-Sink Temperature	Analog Input	9037	Read_NoWrite		39038	InputRegister	2	
I9038_ODU1_Inv1InputCT	ODU Main Inverter #1 Input Current (CT)	Analog Input	9038	Read_NoWrite		39039	InputRegister	2	○
I9039_ODU1_Inv2InputCT	ODU Main Inverter #2 Input Current (CT)	Analog Input	9039	Read_NoWrite		39040	InputRegister	2	○
I9040_ODU1_Inv1InputVT	ODU Main Inverter #1 Input Voltage	Positive Integer Value	9040	Read_NoWrite		39041	InputRegister	2	

Due to our policy of continuous product innovation, some specifications may change without notification.
©LG Electronics U.S.A., Inc., Englewood Cliffs, NJ. All rights reserved. "LG" is a registered trademark of LG Corp.

Table 50: BACnet / Modbus Object List for DOAS Units Table, continued.

Variable	Description	BACNET				MODBUS			
		Object Type	Instance No.	Access	COV Incre.	Index	Register Type	Size	x 0.1 Req.
Input Register, continued									
I9041_ODU1_Inv2InputVT	ODU Main Inverter #1 Input Voltage	Positive Integer Value	9041	Read_NoWrite		39042	InputRegister	2	
I9042_ODU1_Inv1PhaseCT	ODU Main Inverter #1 Phase Current	Analog Input	9042	Read_NoWrite		39043	InputRegister	2	○
I9043_ODU1_Inv2PhaseCT	ODU Main Inverter #2 Phase Current	Analog Input	9043	Read_NoWrite		39044	InputRegister	2	○
I9044_ODU1_Fan1PhaseCT	ODU Main Fan #1 Phase Current	Analog Input	9044	Read_NoWrite		39045	InputRegister	2	○
I9045_ODU1_Fan2PhaseCT	ODU Main Fan #2 Phase Current	Analog Input	9045	Read_NoWrite		39046	InputRegister	2	○
I9046_ODU1_Inv1DCLink	ODU Main Inverter #1 DC Link	Positive Integer Value	9046	Read_NoWrite		39047	InputRegister	2	
I9047_ODU1_Inv2DCLink	ODU Main Inverter #2 DC Link	Positive Integer Value	9047	Read_NoWrite		39048	InputRegister	2	
I9054_Master DOAS_HRUnit_ LiquidTemp	Main DOAS Liquid Pipe Refrigerant Temp.	Analog Input	9054	Read_NoWrite		39055	InputRegister	2	○
I9055_Master DOAS_SCInletTemp	Main DOAS Sub-Cooling Circuit Inlet Refrigerant Temperature	Analog Input	9055	Read_NoWrite		39056	InputRegister	2	○
I9056_Master DOAS_SCOutletTemp	Main DOAS Sub-Cooling Circuit Outlet Refrigerant Temperature	Analog Input	9056	Read_NoWrite		39057	InputRegister	2	○
I9104_ODU2_HighPressureTrace	ODU Sub #1 High Pressure	Positive Integer Value	9104	Read_NoWrite		39105	InputRegister	2	
I9105_ODU2_LowPressureTrace	ODU Sub #1 Low Pressure	Positive Integer Value	9105	Read_NoWrite		39106	InputRegister	2	
I9112_ODU2_Inv1Trace	ODU Sub #1 Inverter #1 Compressor Hz	Positive Integer Value	9112	Read_NoWrite		39113	InputRegister	2	
I9114_ODU2_Inv2Trace	ODU Sub #1 Inverter #2 Compressor Hz	Positive Integer Value	9114	Read_NoWrite		39115	InputRegister	2	
I9115_ODU2_Fan1Trace	ODU Sub #1 Fan#1 RPM	Positive Integer Value	9115	Read_NoWrite		39116	InputRegister	2	
I9116_ODU2_Fan2Trace	ODU Sub #1 Fan#1 RPM	Positive Integer Value	9116	Read_NoWrite		39117	InputRegister	2	
I9123_ODU2_AirTemp	ODU Sub #1 Ambient Temperature	Analog Input	9123	Read_NoWrite		39124	InputRegister	2	○
I9124_ODU2_SuctionTemp	ODU Sub #1 Suction (to Accumulator) Temperature	Analog Input	9124	Read_NoWrite		39125	InputRegister	2	○
I9125_ODU2_CondeseTemp	ODU Sub #1 Condenser Temperature	Analog Input	9125	Read_NoWrite		39126	InputRegister	2	○
I9126_ODU2_EvaporateTemp	ODU Sub #1 Evaporator Temperature	Analog Input	9126	Read_NoWrite		39127	InputRegister	2	○
I9136_ODU2_Inv1IPMTemp	ODU Sub #1 Inverter #1 Heat-Sink Temperature	Analog Input	9136	Read_NoWrite		39137	InputRegister	2	
I9137_ODU2_Inv2IPMTemp	ODU Sub #1 Inverter #2 Heat-Sink Temperature	Analog Input	9137	Read_NoWrite		39138	InputRegister	2	
I9138_ODU2_Inv1InputCT	ODU Sub #1 Inverter #1 Input Current (CT)	Analog Input	9138	Read_NoWrite		39139	InputRegister	2	○
I9139_ODU2_Inv2InputCT	ODU Sub #1 Inverter #2 Input Current (CT)	Analog Input	9139	Read_NoWrite		39140	InputRegister	2	○
I9140_ODU2_Inv1InputVT	ODU Sub #1 Inverter #1 Input Voltage	Positive Integer Value	9140	Read_NoWrite		39141	InputRegister	2	
I9141_ODU2_Inv2InputVT	ODU Sub #1 Inverter #2 Input Voltage	Positive Integer Value	9141	Read_NoWrite		39142	InputRegister	2	
I9142_ODU2_Inv1PhaseCT	ODU Sub #1 Inverter #1 Phase Current	Analog Input	9142	Read_NoWrite		39143	InputRegister	2	○
I9143_ODU2_Inv2PhaseCT	ODU Sub #1 Inverter #2 Phase Current	Analog Input	9143	Read_NoWrite		39144	InputRegister	2	○
I9144_ODU2_Fan1PhaseCT	ODU Sub #1 Fan #1 Phase Current	Analog Input	9144	Read_NoWrite		39145	InputRegister	2	○

Due to our policy of continuous product innovation, some specifications may change without notification.
©LG Electronics U.S.A., Inc., Englewood Cliffs, NJ. All rights reserved. "LG" is a registered trademark of LG Corp.

CONTROLLER

BACnet / Modbus Object List

Table 51: BACnet / Modbus Object List for DOAS Units Table, continued.

Variable	Description	BACNET				MODBUS			
		Object Type	Instance No.	Access	COV Incre.	Index	Register Type	Size	x 0.1 Req.
Input Register, continued									
I9145_ODU2_Fan2PhaseCT	ODU Sub #1 Fan #2 Phase Current	Analog Input	9145	Read_NoWrite		39146	InputRegister	2	○
I9146_ODU2_Inv1DCLink	ODU Sub #1 Inverter #1 DC Link	Positive Integer Value	9146	Read_NoWrite		39147	InputRegister	2	
I9147_ODU2_Inv2DCLink	ODU Sub #1 Inverter #2 DC Link	Positive Integer Value	9147	Read_NoWrite		39148	InputRegister	2	
I9154_Slave#1 DOAS_HRUnit_ LiquidTemp	Sub #1 DOAS Liquid Pipe Refrigerant Temp.	Analog Input	9154	Read_NoWrite		39155	InputRegister	2	○
I9155_Slave#1 DOAS_HRUnit_ SCInletTemp	Sub #1 DOAS Sub-Cooling Circuit Inlet Temperature	Analog Input	9155	Read_NoWrite		39156	InputRegister	2	○
I9156_Slave#1 DOAS_HRUnit_ SCOutletTemp	Sub #1 DOAS Sub-Cooling Circuit Outlet Temperature	Analog Input	9156	Read_NoWrite		39157	InputRegister	2	○
Holding Register									
H000_ModbusSlaveAddress	DOAS Unit No. (Multiple Combination of DOAS Unit)	Positive Integer Value	1000	Read_NoWrite		40001	HoldingRegister	2	
H010_OverrideKeepTime	Manual Override Holding Time	Positive Integer Value	1010	Read_NoWrite		40011	HoldingRegister	2	
H012_StartUpDelayTime	Start-Up Delay Time	Positive Integer Value	1012	Read_NoWrite		40013	HoldingRegister	2	
H014_OccupancyDetectTime	Occupancy Detection Time	Positive Integer Value	1014	Read_NoWrite		40015	HoldingRegister	2	
H018_SoftShutdownSetpoint	Soft Shutdown Set Point	Analog Input	1018	Read_NoWrite		40019	HoldingRegister	2	○
H019_AutoDryActiveTime	Auto Dry Active Time	Positive Integer Value	1019	Read_NoWrite		40020	HoldingRegister	2	
H028_CoolingLockoutTemperature	Cooling Lockout Temperature	Analog Input	1028	Read_NoWrite		40029	HoldingRegister	2	○
H029_HeatingLockoutTemperature	Heating Lockout Temperature	Analog Input	1029	Read_NoWrite		40030	HoldingRegister	2	○
H041_ControlModeOf TemperatureControl	Temperature Control Mode	Positive Integer Value	1041	Read_NoWrite		40042	HoldingRegister	2	
H042_SATempSetpoint OfTemperatureControl	Target Temperature (Supply Air Temp. Control)	Analog Value	1042	ReadCOV_ Writable	0.5	40043	HoldingRegister	2	○
H044_HeatingCooling DeadBandOfTemperatureControl	Deadband	Analog Input	1044	Read_NoWrite		40045	HoldingRegister	2	○
H045_Temperature HysteresisOfFanMode	Fan Mode Temperature Hysteresis	Analog Input	1045	Read_NoWrite		40046	HoldingRegister	2	○
H046_CoolingTemperature SetpointOfTemperatureControl OnUnoccupancy	Unoccupied Temperature Setpoint for Cooling	Analog Input	1046	Read_NoWrite		40047	HoldingRegister	2	○
H047_HeatingTemperature SetpointOfTemperature ControlOnUnoccupancy	Unoccupied Temperature Setpoint for Heating	Analog Input	1047	Read_NoWrite		40048	HoldingRegister	2	○
H048_CoolingTemperature HysteresisOfTemperatureControl OnUnoccupancy	Unoccupied Cooling Temp. Hysteresis	Analog Input	1048	Read_NoWrite		40049	HoldingRegister	2	○
H049_HeatingTemperature HysteresisOfTemperature ControlOnUnoccupancy	Unoccupied Heating Temp. Hysteresis	Analog Input	1049	Read_NoWrite		40050	HoldingRegister	2	○
H057_LowTemperatureOperation TemperatureSetpointOf TemperatureControl	Low Temp Operating Setpoint	Analog Input	1057	Read_NoWrite		40058	HoldingRegister	2	○

Due to our policy of continuous product innovation, some specifications may change without notification.
©LG Electronics U.S.A., Inc., Englewood Cliffs, NJ. All rights reserved. "LG" is a registered trademark of LG Corp.

Table 52: BACnet / Modbus Object List for DOAS Units Table, continued.

Variable	Description	BACNET				MODBUS			
		Object Type	Instance No.	Access	COV Incre.	Index	Register Type	Size	x 0.1 Req.
Holding Register, continued									
H060_ DelayTimeOfHumidityControl	Humidity Control Delay Time	Positive Integer Value	1060	Read_NoWrite		40061	HoldingRegister	2	
H061_MinimumOnTimeOf HumidityControl	Humidity Control Minimum On Time	Positive Integer Value	1061	Read_NoWrite		40062	HoldingRegister	2	
H062_ControlModeOf HumidityControl	Humidity Control Mode	Positive Integer Value	1062	Read_NoWrite		40063	HoldingRegister	2	
H063_ControlModeOf HumidityControlOnUnoccupancy	Unoccupied Control Mode for Humidity Control	Positive Integer Value	1063	Read_NoWrite		40064	HoldingRegister	2	
H065_OADewpointSetpointOf HumidityControl	OA Dewpoint Setpoint for Humidity control	Analog Input	1065	Read_NoWrite		40066	HoldingRegister	2	○
H066_SpaceRelativeHumidity SetpointOfHumidityControl	Space RH Setpoint for Humidity control	Analog Input	1066	Read_NoWrite		40067	HoldingRegister	2	○
H067_SpaceDewpointSetpointOf HumidityControl	Space Dewpoint Setpoint for Humidity Control	Analog Input	1067	Read_NoWrite		40068	HoldingRegister	2	○
H068_SpaceRelativeHumidity SetpointOfHumidityControl OnUnoccupancy	Unoccupied Space RH Setpoint for Humidity Control	Analog Input	1068	Read_NoWrite		40069	HoldingRegister	2	○
H069_SpaceDewpointSetpointOf HumidityControlOnUnoccupancy	Unoccupied Space Dew Point Setpoint for Humidity Control	Analog Input	1069	Read_NoWrite		40070	HoldingRegister	2	○
H070_RelativeHysteresisOf HumidityControl	Humidity Control Hysteresis	Analog Input	1070	Read_NoWrite		40071	HoldingRegister	2	○
H071_DewpointHysteresisOf HumidityControl	Humidity Control Dew Point Hysteresis	Analog Input	1071	Read_NoWrite		40072	HoldingRegister	2	○
H072_RelativeHysteresisOf HumidityControlOnUnoccupancy	Unoccupied Humidity Control Hysteresis	Analog Input	1072	Read_NoWrite		40073	HoldingRegister	2	○
H073_DewpointHysteresisOf HumidityControlOnUnoccupancy	Unoccupied Humidity Control Dewpoint Hysteresis	Analog Input	1073	Read_NoWrite		40074	HoldingRegister	2	○
H074_ColdCoilSetpointOf HumidityControl	Humidity Control Cold Coil Setpoint	Analog Input	1074	Read_NoWrite		40075	HoldingRegister	2	○
H075_ColdCoilHysteresisOf HumidityControl	Humidity Control Cold Coil Hysteresis	Analog Input	1075	Read_NoWrite		40076	HoldingRegister	2	○
H121_ControlModeOfSAFan	Supply Air Fan Control Mode	Positive Integer Value	1121	Read_ Writeable		40121	HoldingRegister	2	
H125_ConstantVolume SetpointofSAFan	% Setpoint of SA Fan (Fixed Speed RPM)	Positive Integer Value	1125	Read_ Writeable		40122	HoldingRegister	2	
H126_AirVolumeModulation SetpointOFSAFan	Air Volume (CFM) Setpoint Supply Fan	Positive Integer Value	1126	Read_ Writeable		40123	HoldingRegister	2	
H130_ MinAirVolumeByCO2ofSAFan	SA Minimum CFM Correlating Fan Stop Setpoint	Positive Integer Value	1130	Read_NoWrite		40131	HoldingRegister	2	
H134_HysteresisOfSAFan	Supply Air Fan Hysteresis	Positive Integer Value	1134	Read_NoWrite		40135	HoldingRegister	2	
H141_ControlModeOfEAFan	Exhaust Air Fan Control Mode	Positive Integer Value	1141	Read_ Writeable		40142	HoldingRegister	2	
H145_ConstantVolume SetpointOfEAFan	% Setpoint of EA Fan (Fixed Speed RPM)	Positive Integer Value	1145	Read_ Writeable		40146	HoldingRegister	2	
H146_AirVolumeModulation SetpointOfEAFan	Air Volume (CFM) Setpoint Exhaust Fan	Positive Integer Value	1146	Read_ Writeable		40147	HoldingRegister	2	
H148_SAFanTrackingOffset SetpointOfEAFan	EA Fan Offset for SA Fan Tracking	Positive Integer Value	1148	Read_ Writeable		40149	HoldingRegister	2	
H150_MinAirVolumeBy CO2OfEAFan	EA Minimum CFM Correlating to Fan Stop Setpoint	Positive Integer Value	1150	Read_NoWrite		40151	HoldingRegister	2	

Due to our policy of continuous product innovation, some specifications may change without notification.
©LG Electronics U.S.A., Inc., Englewood Cliffs, NJ. All rights reserved. "LG" is a registered trademark of LG Corp.

CONTROLLER

BACnet / Modbus Object List

Table 53: BACnet / Modbus Object List for DOAS Units Table, continued.

Variable	Description	BACNET				MODBUS			
		Object Type	Instance No.	Access	COV Incre.	Index	Register Type	Size	x 0.1 Req.
Holding Register, continued									
H154_HysteresisOfEAFan	EA Fan Hysteresis	Positive Integer Value	1154	Read_NoWrite		40155	HoldingRegister	2	
H160_ControlCycleOfERW	Energy Wheel Control Cycle (sec.)	Positive Integer Value	1160	Read_NoWrite		40161	HoldingRegister	2	
H161_ControlStepOfERW	Energy Wheel Control Step %	Positive Integer Value	1161	Read_NoWrite		40162	HoldingRegister	2	
H190_ControlCycleOFEconomizer	Economizer Control Cycle (sec.)	Positive Integer Value	1190	Read_NoWrite		40191	HoldingRegister	2	
H191_ControlModeOfEconomizer	Economizer Control Mode	Positive Integer Value	1191	Read_NoWrite		40192	HoldingRegister	2	
H192_OATempSetpoint OfEconomizer	Economizer OA Temp. Setpoint	Analog Input	1192	Read_NoWrite		40193	HoldingRegister	2	○
H193_OutEnthalpySetpoint OfEconomizer	Economizer Out Enthalpy Setpoint	Analog Input	1193	Read_NoWrite		40194	HoldingRegister	2	○
H194_OutTempHysteresis OfEconomizer	Economizer Out Temp. Hysteresis Setpoint	Analog Input	1194	Read_NoWrite		40195	HoldingRegister	2	○
H195_OutEnthalpyHysteresis OfEconomizer	Economizer Out Enthalpy Hysteresis	Analog Input	1195	Read_NoWrite		40196	HoldingRegister	2	○
H200_CO2ControlCycle	Control Cycle CO_2	Positive Integer Value	1200	Read_NoWrite		40201	HoldingRegister	2	
H201_CO2ControlMode	Control Mode CO_2	Positive Integer Value	1201	Read_NoWrite		40202	HoldingRegister	2	
H202_CO2FanControlStep	Fan Control Step CO_2	Positive Integer Value	1202	Read_NoWrite		40203	HoldingRegister	2	
H204_ Co2FanDecelerationSetPoint	Fan Deceleration Setpoint CO_2	Positive Integer Value	1204	Read_NoWrite		40205	HoldingRegister	2	
H205_CO2FanStopSetPoint	Fan Stop Set point CO_2	Positive Integer Value	1205	Read_NoWrite		40206	HoldingRegister	2	
H206_CO2Hysteresis	CO_2 Hysteresis	Positive Integer Value	1206	Read_NoWrite		40207	HoldingRegister	2	
H360_SpaceTemperatureOfBms	BMS Space Temperature	Analog Value	1360	Read_ Writeable		40361	HoldingRegister	2	○
H361_SpaceHumidityOfBms	BMS Space Humidity	Analog Value	1361	Read_ Writeable		40362	HoldingRegister	2	○
H362_SpaceCO2OfBms	BMS Space CO_2	Positive Integer Value	1362	Read_ Writeable		40363	HoldingRegister	2	
H363_SupplyTemperatureOfBms	BMS Supply Temperature	Analog Value	1363	Read_ Writeable		40364	HoldingRegister	2	○
H364_SupplyHumidityOfBms	BMS Supply Humidity	Analog Value	1364	Read_ Writeable		40365	HoldingRegister	2	○
Discrete Input									
D000_OperationStatus	DOAS Status	Binary Input	0	Read_NoWrite		10001	DiscreteInput		
D001_ErrorStatus	Error Status	Binary Input	1	Read_NoWrite		10002	DiscreteInput		
D002_AlarmStatus	Alarm Status of DOAS and ODU	Binary Input	2	Read_NoWrite		10003	DiscreteInput		
D016_SAFanStatus	Status of Supply Fan On / Off	Binary Input	16	Read_NoWrite		10017	DiscreteInput		
D017_EAFanStatus	Status of Supply Fan On / Off	Binary Input	17	Read_NoWrite		10018	DiscreteInput		
D018_ERWStatus	Status of Energy Recovery Wheel On / Off	Binary Input	18	Read_NoWrite		10019	DiscreteInput		
D019_PreheatHeater Status	Status of Electric Pre-Heater On / Off	Binary Input	19	Read_NoWrite		10020	DiscreteInput		
D020_MainCoilStatus	Status of On / Off	Binary Input	20	Read_NoWrite		10021	DiscreteInput		
D021_ReheatCoilStatus	Reheat Coil EEV Opening Position (Pulse)	Binary Input	21	Read_NoWrite		10022	DiscreteInput		

Due to our policy of continuous product innovation, some specifications may change without notification.
©LG Electronics U.S.A., Inc., Englewood Cliffs, NJ. All rights reserved. "LG" is a registered trademark of LG Corp.

Table 54: BACnet / Modbus Object List for DOAS Units Table, continued.

Variable	Description	BACNET				MODBUS			
		Object Type	Instance No.	Access	COV Incre.	Index	Register Type	Size	x 0.1 Req.
Discrete Input, continued									
D022_RecoveryCoilStatus	Reheat Coil EEV Opening Position (Pulse)	Binary Input	22	Read_NoWrite		10023	DiscreteInput		
D030_SAFilterSign	Supply Air Filter Alarm	Binary Input	30	Read_NoWrite		10031	DiscreteInput		
D031_RAFilterSign	Return Air Filter Alarm	Binary Input	31	Read_NoWrite		10032	DiscreteInput		
D032_Occupancy	Occupancy Status (Occupied / Unoccupied)	Binary Input	32	Read_NoWrite		10033	DiscreteInput		
D046_LatentHeatControl OperCondition	Soft Shutdown Setpoint	Binary Input	46	Read_NoWrite		10047	DiscreteInput		
D047_AutoDryOperCondition	Auto Dry Operation (Time Delay)	Binary Input	47	Read_NoWrite		10048	DiscreteInput		
Coil									
C000_UnitEnable	Unit Enable	Binary Value	0	ReadCOV_ Writable		1	Coil		
C001_Occupancy	Unit Occupancy	Binary Value	1	ReadCOV_ Writable		2	Coil		
C010_PowerLossAutoReset	Auto Reset Upon Loss of Power	Binary Value	1010	Read_NoWrite		11	Coil		
C011_ShutdownAlarmAutoReset	Shutdown Alarm if Auto Reset is Enabled	Binary Value	1011	Read_NoWrite		12	Coil		
C013_PrioritySelectionIn Dehumidifying	Unit Operating mode Prioritization as OA Condition Varies	Binary Value	1013	Read_NoWrite		14	Coil		
C016_CO2InterLockControl	Interlock Fan Vontrol for CO_2	Binary Value	1016	Read_NoWrite		17	Coil		
C019_OccupancySource		Binary Value	1019	Read_NoWrite		20	Coil		
C020_DOASOnOffControlSource		Binary Value	1020	Read_NoWrite		21	Coil		
C021_ CoolingEnableInUnoccupancy	Unoccupied Cooling Enable	Binary Value	1021	Read_NoWrite		22	Coil		
C022_HeatingEnableIn Unoccupancy	Unoccupied Heating Enable	Binary Value	1022	Read_NoWrite		23	Coil		
C023_DehumidifyingEnableIn Unoccupancy	Unoccupied Dehumification Enable	Binary Value	1023	Read_NoWrite		24	Coil		
C024_ReheatCoilDisable	Disable Reheat Coil	Binary Value	1024	Read_NoWrite		25	Coil		
C025_FanStopInDefrostMode	Fan Stop in Defrost Mode	Binary Value	1025	Read_NoWrite		26	Coil		
C026_FanDecelerationIn DefrostMode	Fan Deceleration in Defrost Mode	Binary Value	1026	Read_NoWrite		27	Coil		
C030_IsInstallSpace TemperatureSensor	If Space Temperature Sensor is Installed	Binary Value	1030	Read_NoWrite		31	Coil		
C031_ IsInstallSpaceHumiditySensor	If Space Humidity Sensor is Installed	Binary Value	1031	Read_NoWrite		32	Coil		
C032_IsInstallAnotherSA TemperatureSensor	If Duct Temperature Sensor is Installed	Binary Value	1032	Read_NoWrite		33	Coil		
C033_IsInstallSAHumiditySensor	If Duct Humidity Sensor is Installed	Binary Value	1033	Read_NoWrite		34	Coil		
C034_ IsInstallEADiffPressureSensor	If Exhaust Air Differential Pressure Sensor is Installed	Binary Value	1034	Read_NoWrite		35	Coil		
C035_ IsInstallSADiffPressureSensor	Value for Supply Air Differential Pressure Sensor	Binary Value	1035	Read_NoWrite		36	Coil		
C062_ForcedOperation	Forced Unit Operation	Binary Value	1062	Read_NoWrite		63	Coil		

Due to our policy of continuous product innovation, some specifications may change without notification.
©LG Electronics U.S.A., Inc., Englewood Cliffs, NJ. All rights reserved. "LG" is a registered trademark of LG Corp.

INSTALLATION CHECKLIST

PAGE 1

System I.D. No. _____ Unit I.D. _____

Checked by: _____ Date: _____ Signature: _____

When connecting the DOAS system, ensure that all information in DOAS Installation Manual is read by installers and that the system is configured as applicable per the instructions.

Note:

- *Do not use the following functions of MV5 which could interrupt proper Target Pressure control for DOAS*
- *FN14, FN30, FN8, SE14*
- *FN27 would not be activated base on the DOAS Fan control setting in ODU defrost mode*
- *Do not run unit during construction phase. Damage to internal components may result and void warranty*

Rough-In	**N/A**	**Not Complete**	**Complete**
Packing materials and literature removed from fan discharge.			
Airflow direction correct.			
Fan wheels spin without obstruction.			
Unit is properly supported – mounting bolts tight.			
Unit is level (condensate pump installations).			
Unit is canted toward gravity drain pan nipple (gravity drain installations only).			
Recommended minimum service clearances followed.			
Air filter is clean and properly installed.			
Does local code require a secondary drain pan under the unit? Is a secondary drain line connected to the pan?			
Ductwork	**N/A**	**Not Complete**	**Complete**
All seams sealed – no air leaks.			
Minimum external static pressure requirements met.			
Ductwork is properly sized considering the available external static pressure rating of the unit fan.			
No kinks present in the flexible ductwork. Ductwork is properly supported.			
Ductwork balancing dampers have been installed and are correctly adjusted or open.			
Grilles and registers are properly sized and installed.			
Refrigerant Piping	**N/A**	**Not Complete**	**Complete**
A dry nitrogen purge rate of three (3) psig was maintained during all brazing activity.			
PVE refrigerant oil was used as a lubricant on flare fittings (POE type was NOT used).			
Field formed pipe flares are 45°.			
(Any) flare fittings were properly tightened.			
Refrigerant pipe is properly supported to keep lateral pressure off unit connections.			
Refrigerant shutoff valves are full port design with integral Schrader port rated for R410A (option).			
Refrigerant shutoff valves have the same internal pipe diameter as the connected pipe (option).			
Three shutoff valves were installed; one (1) high pressure liquid, one (1) high pressure vapor, one (1) low pressure vapor (option).			
Shutoff valves installed with Schrader port between the indoor unit and the ball of the valve (option).			
Condensate System	**N/A**	**Not Complete**	**Complete**
Condensate pipe is properly sized and supported to keep lateral pressure off unit connections.			
Condensate pipe horizontal segments are sloped a minimum of 1/4"/100' of pipe away from the unit.			
Condensate pipe and drain traps were sized using LG recommendations.			
Field-provided condensate line check valve was installed in the condensate pipe riser (option).			
Condensate traps were installed on gravity drain pipes.			
Condensate line vertical rise between indoor unit bottom and high point of the line does not exceed 27-1/2".			
Condensate pump power has been disconnected (Gravity-drain installations only).			
Condensate pump riser intersects the building main drain using an inverted trap with connection to the top half of the drain line with no more of a ±45° of vertical.			
If required by local code, is a secondary high level condensate shutoff switch present/wired properly (factory provided internal high level float switch will shut down cooling operation if high water level in the pan is detected)?			

Due to our policy of continuous product innovation, some specifications may change without notification. ©LG Electronics U.S.A., Inc., Englewood Cliffs, NJ. All rights reserved. "LG" is a registered trademark of LG Corp.

INSTALLATION CHECKLIST

PAGE 2

System I.D. No. _____ Unit I.D. _____

Checked by: _____ Date: _____ Signature: _____

Insulation	**N/A**	**Not Complete**	**Complete**
Additional housing, refrigerant and condensate pipe insulation has been supplemented to prevent sweating while operating if unit installed in abnormal environmental conditions. (Optional - job condition specific.)			
All pipes are independently insulated. All insulation seams and joints are airtight. Insulation is not compressed.			
Double layer insulation is provided at pipe supports and wall penetrations.			
Electrical	**N/A**	**Not Complete**	**Complete**
Power provided is single phase, ±10% of unit nameplate specifications.			
Power wires properly sized and protected per NEC and local codes. DOAS unit is properly grounded.			
Power and communications conductors are separated by the recommended minimum distance.			
Terminal block screws are tight. Power wires are not in contact with terminals (A) and / or (B). Line voltage wires have spade connectors installed.			
Power wires are properly secured to the control box case to prevent wire tension at the terminal block.			
Wires are protected from chaffing at control box and conduit pipe penetrations.			
(Optional) Smoke detector is properly installed and wired. New batteries are installed (if applicable).			
Low voltage control cables are properly secured to the control panel case. Terminal block screws are tight and the cable is protected from sharp edges at control box case and conduit openings.			
Cables are installed at recommended distances from high voltage and EMF generating equipment.			
Outdoor unit / DOAS unit communications cable (terminals [A] and [B]).			
Field-provided communications cable is 18 AWG, 2 (2 conductor), twisted, stranded and shielded. All terminations are made at the terminal block. No inline splices or wire caps are present.			
Communications cable is plenum rated.			
Communications cable shield is tied back and is grounded at only ONE end.			
DOAS Unit Control Panel	**N/A**	**Not Complete**	**Complete**
Ethernet cable is securely plugged into the RJ-45 network port of Carel® Controller socket on the DOAS unit circuit board.			
If an optional sensors were installed, the associated cable is plugged into ports.			
If a gravity drain primary condensate system is used (condensate pipe ONLY connected to the lowest nipple), the CN-D / Pump plugged has been removed from the socket on the control board (High-Static models only).			
All plugs are properly seated in the ports on the control board.			
Power and communications cables are properly restrained and separated.			
Damper (Field Option)	**N/A**	**Not Complete**	**Complete**
Damper delay time and set points (for both OA and RA) have been adjusted according to the field and manuals from the damper actuator manufacturer (inadequate settings may generate undesirable noise).			

Due to our policy of continuous product innovation, some specifications may change without notification. ©LG Electronics U.S.A., Inc., Englewood Cliffs, NJ. All rights reserved. "LG" is a registered trademark of LG Corp.

LIMITED WARRANTY

The product's full Limited Warranty terms and conditions and arbitration requirements are available at https://www.lghvac.com.

Due to our policy of continuous product innovation, some specifications may change without notification.
©LG Electronics U.S.A., Inc., Englewood Cliffs, NJ. All rights reserved. "LG" is a registered trademark of LG Corp.

20001747 ISO 9001 :2015

DQS Inc.
LG Electronics Inc.

Who to Call for Assistance

Freight Damage and Unit Replacements	**Your LG Manufacturer Representative**
Missing Parts	**Your LG Manufacturer Representative**
Freight Damage and Unit Replacements	**Your LG Manufacturer Representative**
Wrong Unit Model	**Your LG Manufacturer Representative**
Installation, Startup, and Commissioning Technical Assistance	**Your LG Manufacturer Representative**

For warranty information, visit www.lghvac.com.

IM_LG_Split_Compact DOAS_04_25
Supersedes: IM_LG_Split_Compact DOAS_08_24
IM_LG_Split_Compact DOAS_07_24
IM_LG_Split_Compact DOAS_05_24
IM_LG_Split_Compact DOAS_03_24
IM_LG_Split_Compact_DOAS_02_24
IM_LG_Split_Compact_DOAS_07_23
IM_LG_Split_Compact_DOAS_06_23A
IM_LG_Split_Compact_DOAS_06_23
IM_LG_Split_Compact_DOAS_01_23
IM_LG_Split_Compact_DOAS_09_22
IM_LG_Split_Compact_DOAS_06_22
IM_LG_Split_Compact_DOAS_05_22
IM_LG_Split_Compact_DOAS_02_21

LG Electronics, U.S.A., Inc.
Air Conditioning Technologies
4300 North Point Parkway
Alpharetta, Georgia 30022
www.lghvac.com