OWNER'S MANUAL

LG SMART THERMOSTAT

Read this owner's manual thoroughly before operating the product.
Keep it handy for reference at all times.

www.lg.com

Copyright © 2026 LG Electronics. All Rights Reserved.

Table of Contents

Safety

Important Safety Instructions . . . 6
- Read All Instructions Before Use . . . 6
- Safety Information . . . 6

Regulatory Information . . . 9

Product Overview

Product Features . . . 11
- Front View . . . 11
- Bottom View . . . 12

Installation

What's in the Box . . . 13
- Part List . . . 13

Step-by-Step Video Guides . . . 14
- Tools You Need . . . 15
- Turn Off the Power . . . 16
- Check the Wiring . . . 17
- Take a Photo of the Wiring . . . 18
- Remove the Existing Thermostat . . . 19
- Mark and Drill the Mounting Holes . . . 21
- Do You Want to Cover Marks or Holes in the Wall? . . . 22
- Install the Base and Trim Plates . . . 23
- Install the Base Plate . . . 25
- Connect the Wires Using the C-Wire Adapter . . . 26
- Connect the Wires . . . 27
- Attach Your Thermostat . . . 28
- Turn On the Power . . . 29

C-Wire Adapter Installation Guide . . . 30

Turn Off the HVAC Power . . . 31
Take a Photo of the HVAC Wiring . . . 32
Label and Disconnect the HVAC Wires . . . 33
Install the C-Wire Adapter . . . 34
Connect the C-Wire Adapter Harness . . . 35
Turn On the HVAC Power . . . 36
Initial Setup . . . 37
System Compatibility . . . 40
HVAC Compatibility . . . 40
C Wire Requirements . . . 40
Wiring Compatibility . . . 41
Fan Compatibility . . . 42
Wire Identification Reference . . . 43
Base Plate Terminal Reference . . . 45
Conventional System (Gas, Oil, or Electric Furnace) . . . 45
Heat Pump System . . . 46

Connection

Before You Begin . . . 47
System Requirements . . . 47
Using a Home Hub . . . 48
Connecting via Apple Home App . . . 49
Connecting via NFC . . . 49
Connecting Manually . . . 51
Connecting via LG ThinQ App (US Only) . . . 52

Operation

Understanding the Display . . . 54
Display Views . . . 54
Distance View . . . 56
Control View . . . 57
System Status . . . 59
Adjusting the Temperature . . . 61

On the Thermostat . . . 61
Understanding Temperature Priority . . . 62
Changing the System Mode . . . 63
On the Thermostat . . . 63
Understanding System Modes . . . 63
Auto Mode Requirements . . . 63
Changing the Fan Settings . . . 64
On the Thermostat . . . 64
Understanding Fan Settings . . . 64
Using the Option Menu . . . 66
Remove Phone . . . 66
Pair Phone . . . 66
Factory Reset . . . 67
Apple Home Application Features . . . 68
LG ThinQ Application Features (US Only) . . . 70

Maintenance

Cleaning the Device . . . 72
Firmware Updates . . . 73
Checking the Firmware Version . . . 73
Firmware Updates . . . 73

Troubleshooting

Before Calling for Service . . . 74

Appendix

Supported Wiring . . . 80
Supported Wiring Combination Patterns . . . 80
Optional Terminal Additions . . . 82
Summary of Wiring Rules . . . 82
Product Specifications . . . 83
Warranty . . . 84

Trademarks and Licenses 96
Wi-Fi 96
Bluetooth® 96
Open Source Software Notice Information 97

Safety

Important Safety Instructions

Read all safety instructions before installing or operating this thermostat. Keep these instructions for future reference.

Read All Instructions Before Use

Safety Messages

Your safety and the safety of others are very important.

We have provided many important safety messages in this manual and on your appliance. Always read and follow all safety messages.

This is the safety alert symbol.

This symbol alerts you to potential hazards that can kill or injure you and others.

All safety messages will follow the safety alert symbol and either the word WARNING or CAUTION.

These words mean:

WARNING

You may be killed or seriously injured if you do not follow instructions.

CAUTION

You may be injured or cause damage to the product if you do not follow instructions.

All safety messages will tell you what the potential hazard is, tell you how to reduce the chance of injury, and tell you what may happen if the instructions are not followed.

Safety Information

WARNING

You may be killed or seriously injured if you do not follow instructions.

- Before beginning installation or servicing of the thermostat, disconnect power to the HVAC system at the main circuit breaker or system switch.
- This product is designed for use with 24 VAC Class 2 circuits only. Do NOT connect to high-voltage (120/240 V AC) systems such as electric baseboard heaters.

- Verify your system voltage before installation. If you see thick wires connected with wire nuts labeled 120 V AC or 240 V AC, do not proceed and contact a professional electrician immediately.
- Always turn off the power to the heating and cooling system at the main circuit breaker or the system switch before installing or servicing.
- Incorrect wiring connections (such as incorrect wiring of the RC and C power terminals) can cause severe damage to both the thermostat and the HVAC system. Ensure that wires are correctly connected to the designated terminals on the base plate in accordance with HVAC wiring standards.
- Treat all wires as if they are live. Do not short-circuit terminals or use metal tools to test connections, as this may damage the thermostat or the HVAC system.
- Do not install or handle the thermostat with wet hands or while standing on wet or damp surfaces. Moisture entering the device can cause short circuits or electric shock.
- If this product is replacing a control that contains mercury in a sealed tube, do not place the old control in the trash. Contact your local waste management authority for instructions on recycling and proper disposal.

⚠ CAUTION

You may be injured or cause damage to the product if you do not follow instructions.

- Do not use jumper wires. Your new thermostat automatically handles the connection between Rh and Rc. Using old jumper wires from the previous thermostat may damage the equipment.
- Check your wire type. This thermostat is designed for solid core wires. If your existing wires are stranded (twisted), they may not connect properly or could cause a short circuit.
- Label all wires corresponding to the terminal names on your old thermostat, not by wire color. Wire colors may not follow standard codes, and incorrect wiring may cause improper operation or system failure.
- Take a picture of your existing wiring before disconnecting any wires. This reference will be helpful if you need to troubleshoot later.
- Carefully push the excess wires back into the wall hole, ensuring that no wires are pinched between the mounting screws and the wall during installation. Also check that there are no drafts coming from the hole(s) in the wall, and cover the hole(s) as needed to prevent drafts.
- If using a power screwdriver, set it to a low torque. Overtightening the screws may damage the drywall or cause the backplate to warp, preventing proper installation.
- To prevent damage to the compressor, this thermostat is equipped with a built-in restart delay feature. The actual delay time may vary depending on operating conditions and system status.
- Install the thermostat on an interior wall, approximately 5 ft (1.5 m) above the floor. Avoid locations exposed to direct sunlight, drafts from windows, vents, or heat sources, to ensure accurate temperature control.
- Before handling the thermostat or wiring, touch a grounded metal object to discharge static electricity. Electrostatic discharge (ESD) can damage the internal electronic components.
- Clean the thermostat with a soft, dry cloth. Do not use water, solvents, or aerosol cleaners, as moisture can damage the internal electronics.
- Do not subject the product to shocks or drop it.

Regulatory Information

FCC Notice

This equipment has been tested and found to comply with the limits for a Class B digital device, pursuant to Part 15 of the FCC Rules. These limits are designed to provide reasonable protection against harmful interference in a residential installation. This equipment generates, uses, and can radiate radio frequency energy and, if not installed and used in accordance with the instructions, may cause harmful interference to radio communications. However, there is no guarantee that interference will not occur in a particular installation. If this equipment does cause harmful interference to radio or television reception, which can be determined by turning the equipment off and on, the user is encouraged to try to correct the interference by one or more of the following measures:

- Reorient or relocate the receiving antenna.
- Increase the separation between the equipment and the receiver.
- Connect the equipment to an outlet on a circuit different from that to which the receiver is connected.
- Consult the dealer or an experienced radio/TV technician for help.

This device complies with part 15 of the FCC Rules. Operation is subject to the following two conditions:

(1) This device may not cause harmful interference and

(2) This device must accept any interference received, including interference that may cause undesired operation.

Any changes or modifications in construction of this device which are not expressly approved by the party responsible for compliance could void the user's authority to operate the equipment.

FCC RF Radiation Exposure Statement

This equipment complies with FCC radiation exposure limits set forth for an uncontrolled environment. This transmitter must not be co-located or operating in conjunction with any other antenna or transmitter.

This equipment should be installed and operated with a minimum distance of 20 cm (7.8 inches) between the antenna and your body. Users must follow the specific operating instructions for satisfying RF exposure compliance.

FCC Radio Frequency Interference Requirements:

High power radars are allocated as primary users of the 5.25 to 5.35 GHz and 5.65 to 5.85 GHz bands. These radar stations can cause interference with and/or damage this device. This device cannot be co-located with any other transmitter.

Supplier's Declaration of Conformity

47 CFR §2.1077 Compliance Information

Trade Name: LG

Responsible Party: LG Electronics USA, Inc.

Address: 111 Sylvan Avenue, North Building, Englewood Cliffs, NJ 07632

Email: lg.environmental@lge.com

Industry Canada Statement

This device contains licence-exempt transmitter(s)/receiver(s) that comply with Innovation, Science and Economic Development Canada's licence-exempt RSS(s).

Operation is subject to the following two conditions:

(1) This device may not cause interference.

(2) This device must accept any interference, including interference that may cause undesired operation of the device.

CAN ICES (B) / NMB (B)

IC Radiation Exposure Statement

This equipment complies with IC radiation exposure limits set forth for an uncontrolled environment.

This equipment should be installed and operated with a minimum distance of 20 cm (7.8 inches) between the antenna and your body.

NOTE: THE MANUFACTURER IS NOT RESPONSIBLE FOR ANY RADIO OR TV INTERFERENCE CAUSED BY UNAUTHORIZED MODIFICATIONS TO THIS EQUIPMENT. SUCH MODIFICATIONS COULD VOID THE USER'S AUTHORITY TO OPERATE THE EQUIPMENT.

Wireless Communication Notice

5150-5350 MHz is indoor use only.

Users should also be advised that high-power radars are allocated as primary users (i.e. priority users) of the bands 5250-5350 MHz and 5650-5850 MHz and that these radars could cause interference and/or damage to LE-LAN devices.

Product Overview

Product Features

Review this section to understand each component on your device and its function.

Front View

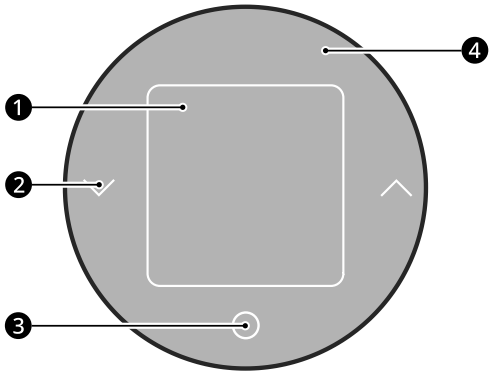

1. **Display**

   Shows the current temperature, target temperature, system mode, and fan status.

   The display switches between Distance View and Control View based on your distance and activity. See *Understanding the Display*.

2. **∨ and ∧ Buttons**

   Press to adjust the target temperature or choose a setting. Press and hold to adjust the temperature continuously.

3. **Menu Button (○)**

   Press to cycle through the **Temperature**, **Mode**, and **Fan** settings. If a Hold is active, press and hold to release the Hold and resume the schedule.

4. **Radar Sensor**

   Detects your presence and distance.

   As you approach, the display automatically switches between Distance View and Control View.

Note

Illustrations may differ from the actual product.

Bottom View

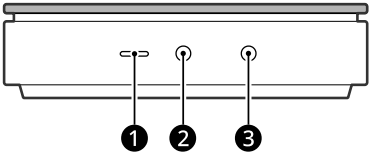

1 **Temperature and Humidity Sensor**

Measures the surrounding temperature and humidity.

Don't block, cover, or insert objects into this opening.

2 **Option Button**

Press and hold for 3 seconds. A menu appears with options for **Pair Phone** and **Factory Reset**.

3 **Ambient Light Sensor**

Detects the surrounding light level and switches the display to Night Mode when it gets dark.

Note

Illustrations may differ from the actual product.

Installation

What's in the Box

Part List

Verify that all the parts listed below are included in the package. If any of the parts are missing or damaged, contact the retailer or customer support immediately.

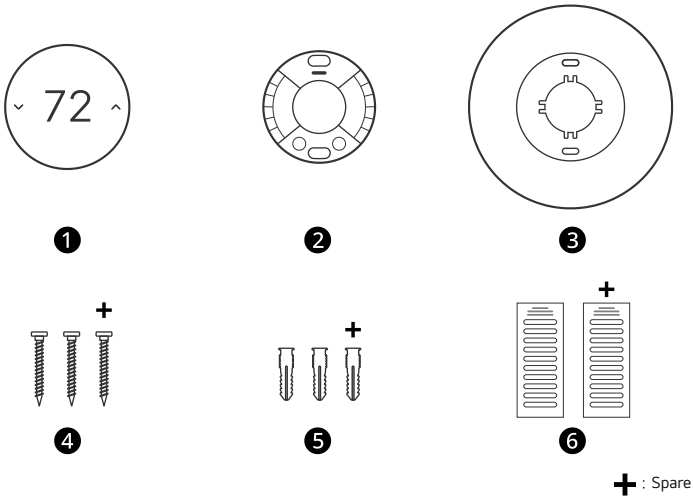

1. LG Smart Thermostat
2. Base Plate
3. Trim Plate
4. Screws (ST4 × 40)
5. Anchors (Ø5 × 25)
6. Wire Labels

Note

- Check that all parts are included before installation.
- Illustrations may differ from the actual product.
- Remove the protective rubber ring from the display after installation and before use.

Step-by-Step Video Guides

Follow these short video segments for each stage of the setup. Watch each clip before performing the corresponding step to make sure the installation is done correctly.

Caution

Use Manual Tools Only: To prevent damage to the device or stripping of the screw threads, do not use a power screwdriver or drill for assembly. Use a manual Phillips screwdriver instead.

Note

- Plan for this installation to take at least 45 minutes.
- Some systems may require a C-Wire Adapter, which may add installation time.
- You can pause at any time and pick up where you left off.
- Check the Wi-Fi signal strength at the installation location before installing the product. If the signal is weak or connectivity issues occur between the product and app, a Wi-Fi extender may be required.

Tools You Need

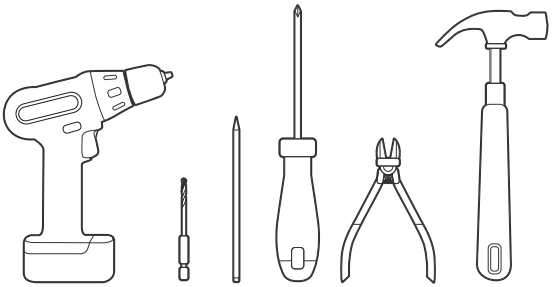

Gather the following tools and keep them nearby.

- Drill
- Drill bit
- Pencil
- Phillips screwdriver
- Pliers
- Hammer

Turn Off the Power



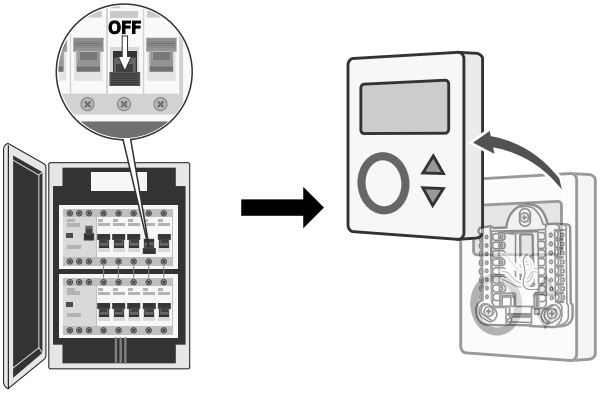

1. Turn off the power to the HVAC system connected to the thermostat you're replacing.
2. Make sure your thermostat is off.

   If your thermostat uses batteries, the display may stay on after the power is turned off.
3. Remove the existing thermostat from its base plate.

Check the Wiring

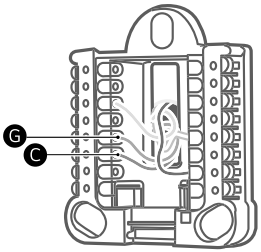

A C wire supplies a consistent flow of low-voltage power to thermostats.

Look for a wire connected to the C terminal on your existing thermostat.

If there isn't a C wire, you can use an LG Smart Thermostat C-Wire Adapter with G, Y, and R wires.

- **I have a C and G Wire**: Continue to *Take a Photo of the Wiring*.
- **I have only a G Wire (Without a C Wire)**: An LG Smart Thermostat C-Wire Adapter is required to finish installing your thermostat. If you don't have one, you can pause setup and continue once you have this adapter. See *C-Wire Adapter Installation Guide*.
- **I have neither wire**: Your thermostat requires a C or G wire for power. You can pause setup until an electrician wires your home, and then pick up where you left off.

Take a Photo of the Wiring

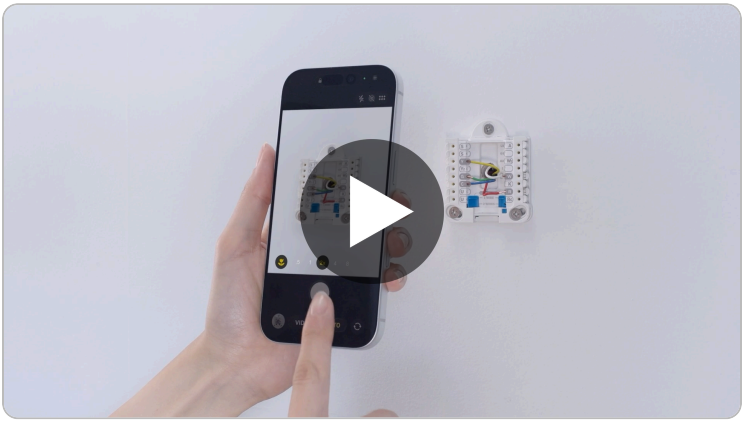

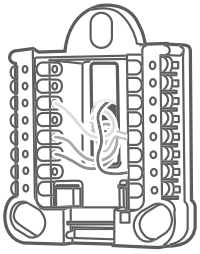

Take a photo of your existing thermostat wiring before disconnecting any wires.

Note

Use the photo as a reference when connecting each wire to the corresponding terminal on your new thermostat.

Remove the Existing Thermostat

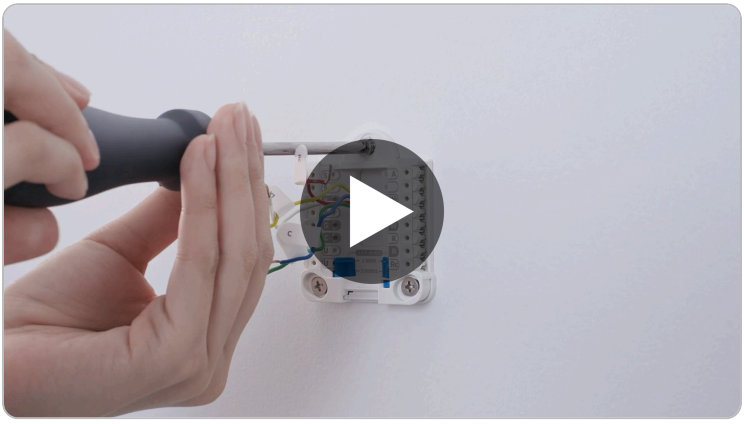

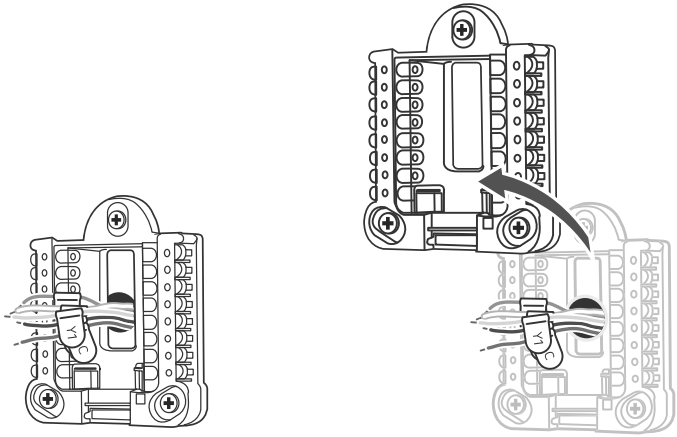

1. Label each wire based on the terminal it's connected to.

   Attach labels according to the wire designations:

   - R → Rc
   - W → W1
   - Y → Y1
   - AUX → W2
   - O or B → O/B

2. Disconnect the wires from your existing thermostat.
3. Remove any jumper wire.

> **Note**
>
> Your thermostat doesn't require jumper wires.

4. Remove the base of your existing thermostat.

> **Caution**
>
> Make sure the wires don't fall back into the wall.

Mark and Drill the Mounting Holes

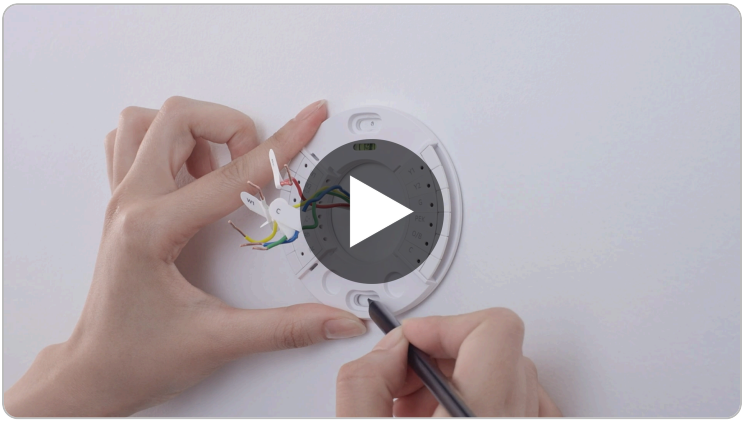

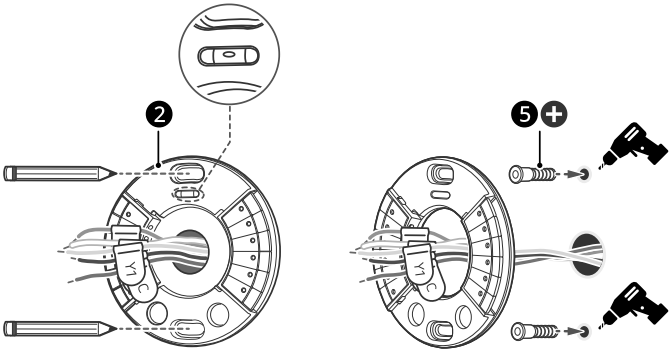

⊕ : Optional
❺: Ø5 × 25

1. Use a level to position the **Base Plate** ❷ horizontally where you want to install your thermostat.
2. Mark the drill points.
3. Drill holes at the marks.
4. If installing into drywall, gently tap the provided **Anchors** ❺ into the holes with a hammer.

Do You Want to Cover Marks or Holes in the Wall?

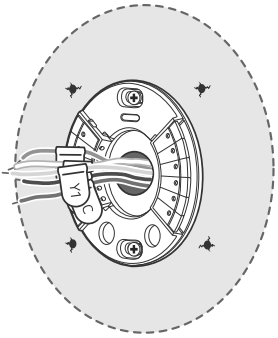

Use the **Trim Plate** to hide any wall openings or marks that extend beyond the **Base Plate**.

After removing your existing thermostat, check the wall to see whether you need the **Trim Plate**.

- **Yes**: Continue to *Install the Base and Trim Plates*.
- **No**: Skip to *Install the Base Plate*.

Install the Base and Trim Plates



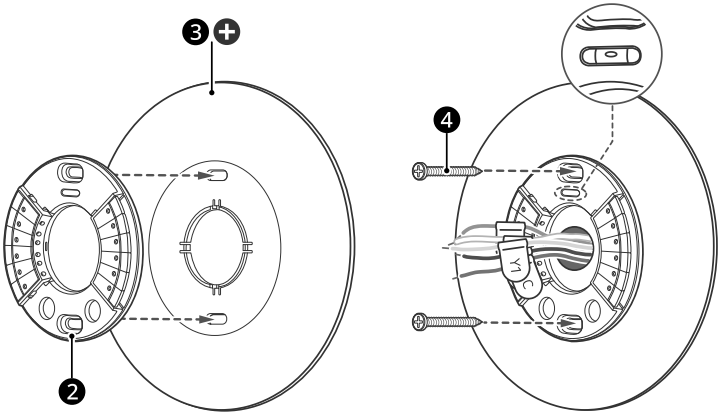

⊕ : Optional
❹: ST4 × 40

1. Press the **Base Plate** ❷ to the back of the **Trim Plate** ❸ until you hear a click.
2. Pass the wires through the center opening in the assembled plates.
3. Use the level at the top edge to make sure the plates are straight.
4. Secure the plates to the wall with the **Screws** ❹.

> ⚠ **Caution**
>
> To prevent damage to the **Base Plate**, use a Phillips screwdriver or reduce the torque on an electric screwdriver.

- **If you installed a C-Wire Adapter:** Skip to *Connect the Wires Using the C-Wire Adapter*.
- **If you have a C wire:** Skip to *Connect the Wires*.

Install the Base Plate



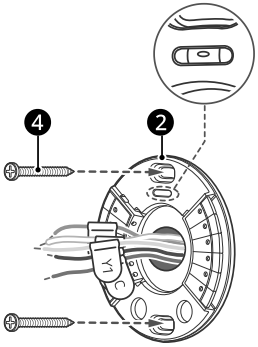

❹: ST4 × 40

1. Pass the wires through the center opening in the **Base Plate**.
2. Use the level at the top edge to make sure the **Base Plate** is straight.
3. Secure the **Base Plate** ❷ to the wall with the **Screws** ❹.

> ⚠ **Caution**
>
> To prevent damage to the **Base Plate**, use a Phillips screwdriver or reduce the torque on an electric screwdriver.

- **If you installed a C-Wire Adapter:** Continue to *Connect the Wires Using the C-Wire Adapter*.
- **If you have a C wire:** Skip to *Connect the Wires*.

Connect the Wires Using the C-Wire Adapter



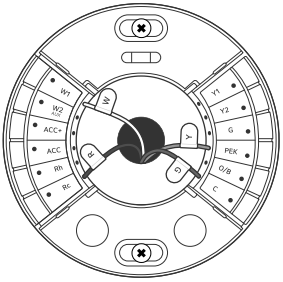

1. If you've installed the C-Wire Adapter, connect the G wire to the C terminal instead of the G terminal.
2. Connect the Y wire to the PEK terminal.
3. Connect each labeled wire to the corresponding terminal. Check the photo in the Photos app if needed.
4. Gently pull each wire to make sure it's securely connected.

Note

- Wire colors may vary depending on your HVAC installation.
- If any wires are bent, use the pliers to straighten them.

After you connect the wires, skip to *Attach Your Thermostat*.

Connect the Wires



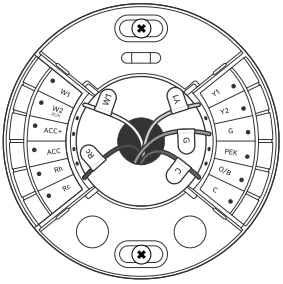

1. If you don't need the C-Wire Adapter, connect each labeled wire to the corresponding terminal. Check the photo in the Photos app if needed.
2. Gently pull each wire to make sure it's securely connected.

Note

- Wire colors may vary depending on your HVAC installation.
- If any wires are bent, use the pliers to straighten them.

Attach Your Thermostat



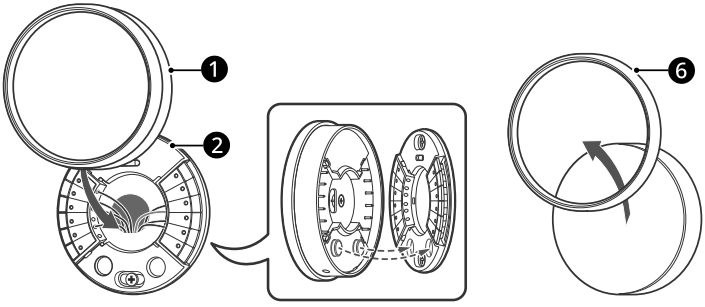

1. Push the wires back into the wall.
2. Align your **Thermostat** with the **Base Plate**.
3. Press your **Thermostat** ❶ onto the **Base Plate** ❷ until you hear a click.
4. Remove the **Protective Rubber Ring** ❻ from the display.

> ⚠ **Caution**
>
> Make sure your **Thermostat** and the **Base Plate** are aligned before you press them together. Misalignment may damage the product.

Turn On the Power



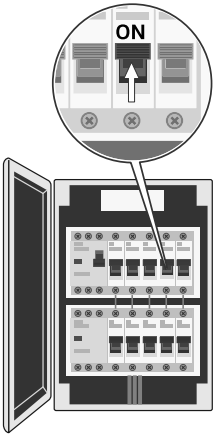

1. Turn on the power to your HVAC system at the circuit breaker.
2. Make sure your thermostat is operating properly.

C-Wire Adapter Installation Guide

Caution

For safety and to prevent equipment damage, use only an LG Smart Thermostat C-Wire Adapter.

The C-Wire Adapter requires G, Y, and R wires to connect your HVAC system to the thermostat. The G wire provides constant power through the C terminal, and the Y wire connects to the PEK terminal, which combines the G and Y functions.

Note

The C-Wire Adapter is not compatible with heat-only or dual-transformer systems.

If your system uses a C-Wire Adapter from another manufacturer, replace it with an LG Smart Thermostat C-Wire Adapter. If you don't have one, purchase one before continuing.

Turn Off the HVAC Power

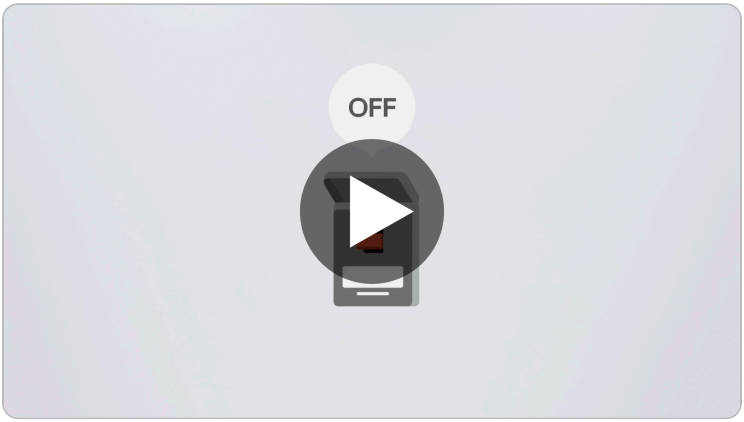

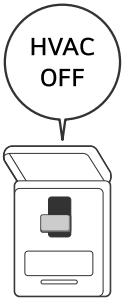

Turn off the power to your HVAC system before you continue.

Note

Most HVAC systems have a power switch nearby.

Take a Photo of the HVAC Wiring

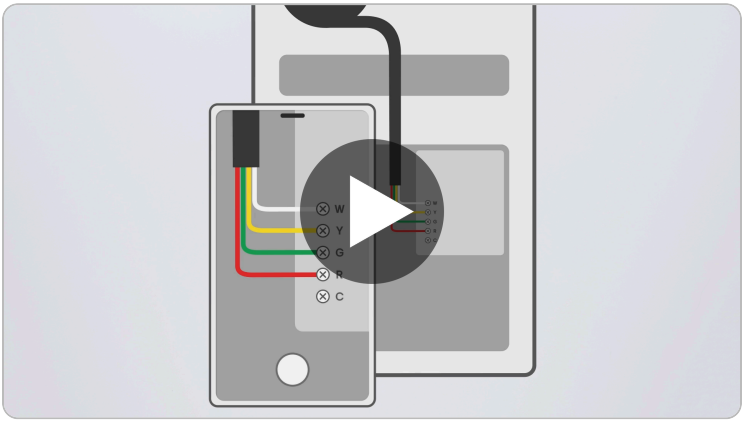

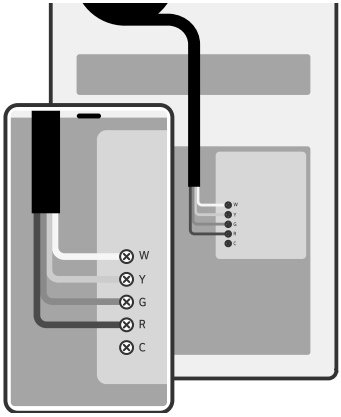

1. Open the HVAC control board.
2. Take a photo of the HVAC wiring before disconnecting any wires.

Note

Use it as a reference for the original terminal connections when connecting your new C-Wire Adapter.

Label and Disconnect the HVAC Wires

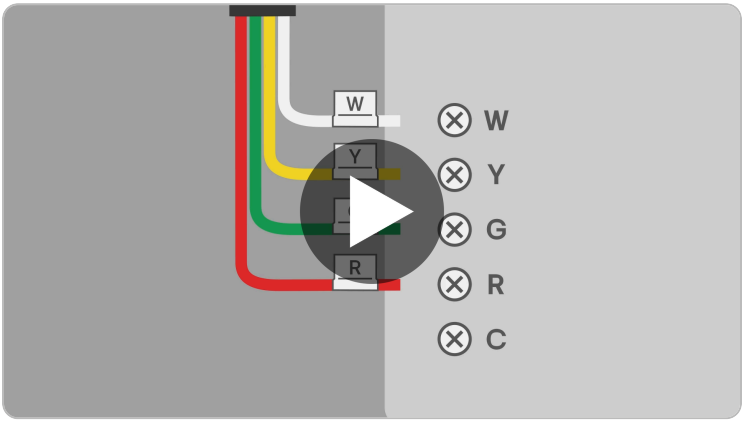

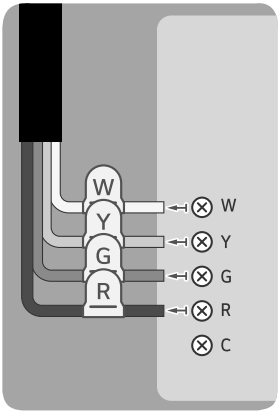

1. Label each wire based on the terminal it's connected to on the HVAC control board.
2. Disconnect the wires.

Note

Label the wires by their original terminal names, not by wire color.

Install the C-Wire Adapter

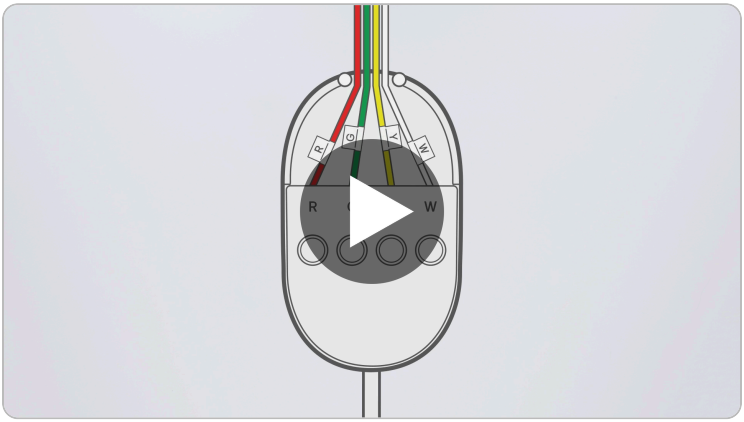

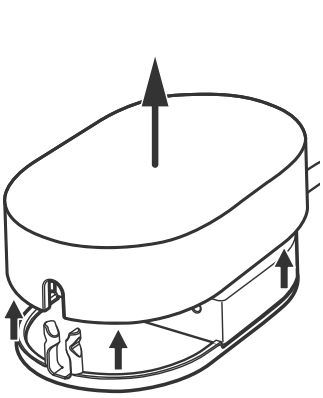

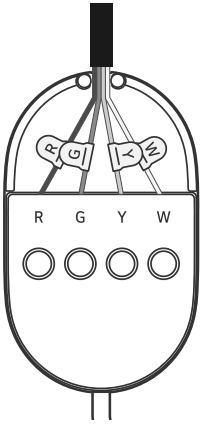

1. Open the cover on the C-Wire Adapter.
2. Connect the disconnected wires to the corresponding terminals on the C-Wire Adapter.
3. Gently pull each wire to make sure it's securely connected.

Connect the C-Wire Adapter Harness

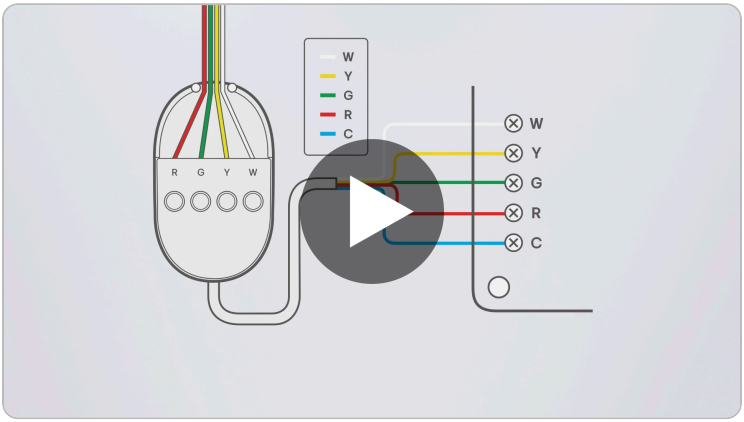

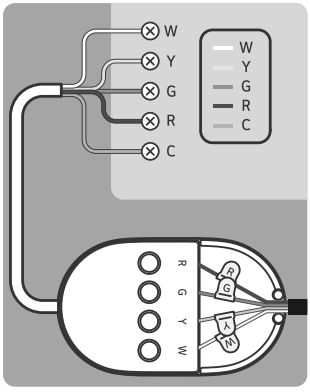

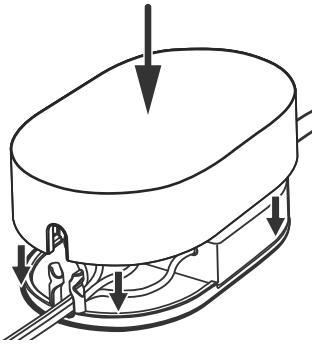

1. Connect the C-Wire Adapter harness to the corresponding terminals on the HVAC control board: R, G, Y, W, and C/Common.
2. Close the C-Wire Adapter cover securely after the wiring is complete.

> **Note**
>
> If any wires are bent, use the pliers to straighten them.

Turn On the HVAC Power

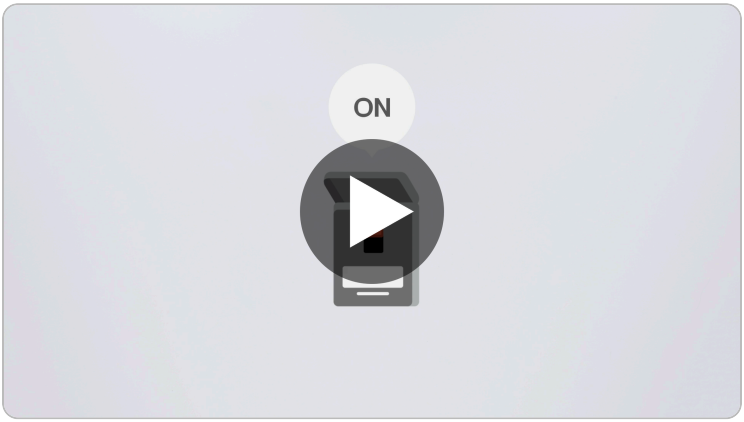

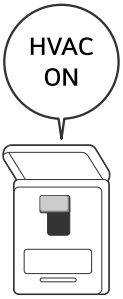

Turn on the power to your HVAC system.

To continue installing your thermostat, see *Take a Photo of the Wiring*.

Initial Setup

The thermostat powers on automatically after installation. The setup guide may vary depending on your home's wiring and system. Follow the onscreen instructions.

Note

- Navigation: Press ∨ or ∧ to scroll through options and press the **Menu** button to confirm.
- To return to the previous step, press and hold the **Menu** button.
- During setup, if there is no activity for 3 minutes, the **Setup Paused** screen appears.
  - **Continue**: Resume setup.
  - **Exit Setup**: Cancel setup and start over.

1. **App Connection**

   Hold your phone near the front of the thermostat. The app opens and guides you through the rest of the setup.

   To set up without the app, wait until **Skip** appears on the screen. To show it right away, press the ∨, ∧, or **Menu** button. Press the **Menu** button to skip to Step 3.

   ### Note

   If you connected your thermostat via NFC before connecting the power, this step is skipped automatically. Go to Step 2.

2. **Mobile Setup**

   Follow the instructions on your phone to complete setup. If setup is completed on your phone, no further setup is required. Go to Step 12.

   To set up on the thermostat instead, press the ∨, ∧, or **Menu** button. When **Skip** appears, press the **Menu** button to skip to Step 3.

3. **Language**

   Choose your preferred language.

4. **Confirm Wires**

   The thermostat detects your wiring and shows the detected wires.

   - If the wires are correct, choose **Confirm**.
   - To change the wires, choose **Update**, select the correct wires, and then choose **Save**.

5. **System Check**

   Press the **Menu** button to continue. The thermostat guides you through a few settings based on your heating and cooling system.

6. **Heat Source** (conventional systems)

   Select your heat source:

   - **Furnace**: Forced-air gas, oil, or electric furnace.
     Then select the **Fan Controller**:
     - **Furnace**
     - **Thermostat**
   - **Boiler or Radiator**: Hot-water, steam, or radiant system.

7. **Auxiliary Heat Source** (heat pump systems with auxiliary heat)

   Select your auxiliary heat source:

   - **Furnace**: Forced-air gas, oil, or electric furnace.
     Then select the **Fan Controller**:
     - **Furnace**
     - **Thermostat**
   - **Boiler or Radiator**: Hot-water, steam, or radiant system.

8. **Reversing Valve** (heat pump systems)

   The O/B wire controls your heat pump's reversing valve, which switches between heating and cooling.

   Select how the O/B reversing valve is energized. If you're unsure, check your previous thermostat's wiring label or your HVAC system manual.

   - **On Cool** (O wire): Energized when cooling.
   - **On Heat** (B wire): Energized when heating.

9. **Accessory Type** (if an accessory is connected)

   Select the type of accessory connected to your thermostat:

   - **Humidifier**
   - **Dehumidifier**
   - **2-Stage Fan**

10. **Accessory Relay** (if you select Humidifier or Dehumidifier)

    Select whether the relay should be open or closed when the accessory is on. You can find this in your accessory's manual.

    - **Open**
    - **Closed**

11. **Accessory Fan** (if you select Humidifier or Dehumidifier)

    Select whether to circulate the fan with the accessory:

    - **Yes**
    - **No**

12. **Finish**

    Setup is complete. The thermostat starts in **Off** mode and shows the current temperature.

> **Note**
>
> When the thermostat is not paired, **Pair Phone** appears at the top of the display.
> To pair your phone, see *Pair Phone*.

System Compatibility

This thermostat works with most 24 VAC residential heating and cooling systems. Before you begin, make sure your system is compatible with the requirements below.

HVAC Compatibility

- This thermostat supports most 24 V HVAC systems, including gas, electric, oil, forced-air, heat pump, and radiant systems.
- It supports up to 2 stages of heating and 2 stages of cooling, depending on system configuration.
- You can connect accessory equipment such as humidifiers and dehumidifiers through the ACC+ / ACC- terminals, depending on system compatibility.

> **Note**
>
> Make sure your HVAC system is working properly before installation. A new thermostat won't fix existing hardware issues.

C Wire Requirements

This thermostat works with or without a C wire.

The C wire (Common) provides constant power to the thermostat. Check your current wiring to determine your setup:

- **If you have a C wire:** Connect it to the C terminal on the **Base Plate**.
- **If you don't have a C wire:** Use an LG Smart Thermostat C-Wire Adapter (sold separately) to provide power without running new wires.

> **Note**
>
> The C-Wire Adapter requires G, Y, and R wires. It is not compatible with heat-only or dual-transformer systems. See *C-Wire Adapter Installation Guide*.

Wiring Compatibility

Before You Install

- Turn off power to your HVAC system.
- Take a clear photo of your current wiring.
- Check which wires are connected to your current thermostat.

Basic Compatibility

- Most standard 24 V systems are compatible.
- Systems that use standard terminals such as R, Y, W, G, and C are typically compatible.
- Systems with a C wire generally provide more stable power.

Jumper Wires

- Older thermostats may use a jumper between RH and RC.
- This thermostat doesn't require jumper wires.
- Remove any jumper wires before installation.

High-Voltage Systems

- Systems labeled 120 V or 240 V are not supported.
- This thermostat works only with low-voltage (24 V) systems.

Special System Types

- This thermostat supports most heat pumps.
- Dual-fuel systems may require additional setup.
- Proprietary or communicating systems may not be compatible.

Note

If the existing thermostat uses terminals labeled A, B, C, D, or Data 1 and 2 instead of standard labels such as R, W, Y, G, and C, the system may be a proprietary communicating system.

Proprietary communicating systems may not be compatible with this thermostat. Contact a licensed HVAC technician for assistance.

Fan Compatibility

This thermostat supports fan control on compatible 24 V HVAC systems. Available fan options depend on the connected system and wiring configuration.

Some systems support selectable fan speeds such as Low and High, while others support only Auto and Off.

> **Note**
>
> Systems that use non-standard or multiple fan control wires (such as G2, G3, GM, or GH) may require professional installation and setup.

Wire Identification Reference

Note

Wire colors vary by installer and are not standardized. Always use the terminal labels on your existing thermostat, not the wire colors.

Terminal	Common Wire Colors	Function
RC	Red	24 VAC power (cooling transformer or single transformer)
RH	Red	24 VAC power (heating transformer, dual-transformer systems only)
C	Blue, Black	Common: provides continuous 24 VAC power
W1	White	Heating stage 1
W2	White, Brown	Heating stage 2
AUX	White	Auxiliary heat (heat pump systems)
Y1	Yellow	Cooling stage 1 / compressor relay
Y2	Yellow, Light blue	Cooling stage 2 / compressor relay
G	Green	Fan relay
O/B	Orange, Dark blue	Heat pump reversing valve
ACC+	Varies	Accessory 1-wire (humidifier, dehumidifier, or 2-stage fan)
ACC-	Varies	Accessory 2-wire return (humidifier, dehumidifier)
PEK	—	C-Wire Adapter connection terminal (for use only when C wire is not present)

Note

If you see a wire you don't recognize, check your HVAC system's documentation, or take a photo of the wiring at your furnace or air handler for reference. Systems with multiple fan wires (G2, G3, GM, or GH) require professional installation.

⚠ Caution

- Do not use jumper wires. This thermostat automatically manages the connection between RH and RC. Jumper wires from the existing thermostat may damage your HVAC system. Remove any jumpers from the existing thermostat and store them safely. Do not install them on this thermostat.
- Do not insert more than one wire into each terminal.

Base Plate Terminal Reference

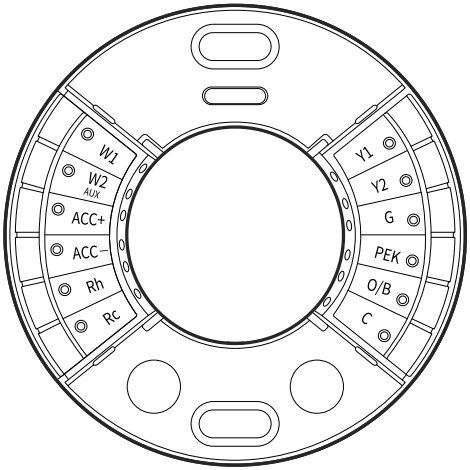

Conventional System (Gas, Oil, or Electric Furnace)

Pin	Description
W1	Stage 1 heat relay
W2/AUX	Stage 2 heat relay
ACC+	1-Wire Humidifier, Dehumidifier, 2-Stage Fan
ACC–	2-Wire Humidifier / Dehumidifier
Rh	24 VAC Heating transformer
Rc	24 VAC Cooling transformer / Single
Y1	Stage 1 compressor relay
Y2	Stage 2 compressor relay
G	Fan relay
PEK	C-Wire Adapter connection terminal
C	24 VAC Common wire

Heat Pump System

Pin	Description
W2/AUX	Auxiliary heat
ACC+	1-Wire Humidifier, Dehumidifier, 2-Stage Fan
ACC–	2-Wire Humidifier / Dehumidifier
Rh	24 VAC Heating transformer
Rc	24 VAC Cooling transformer / Single
Y1	Stage 1 compressor relay
Y2	Stage 2 compressor relay
G	Fan relay
PEK	C-Wire Adapter connection terminal
O/B	Changeover valve for heat pumps
C	24 VAC Common wire

Connection

Before You Begin

Connection methods vary depending on your phone OS and the app you use. Refer to the corresponding section below to connect your device correctly.

Before you begin, make sure your phone, network, and any other required devices meet the requirements listed in this section.

Note

- Keep the device, phone, and hub within close range of each other during setup.
- The NFC antenna location varies by phone manufacturer and model. If the device isn't recognized, try moving the top or center of your phone near the NFC label.
- Check the Wi-Fi signal strength at the installation location before installing the product. If the signal is weak or connectivity issues occur between the product and app, a Wi-Fi extender may be required.
- **If thermostat does not connect:** Perform a **Remove Phone** on the thermostat to clear previous information and then try again. See *Remove Phone* for instructions.

System Requirements

To connect and use your device, your phone must run a compatible operating system (OS) version and meet the following requirements.

- iOS/iPadOS: To use Matter-certified accessories, an iPhone or iPad running **iOS 16.5 or later** is recommended (minimum requirement: iOS 16.1).
- Android: To use Matter-certified accessories, a phone running **Android 13.0 or later** is recommended (minimum requirement: Android 8.1 with Google Play Services v22.48.14 or later).
- Operating System: For a stable experience, use a phone running **iOS 15.0 or later** or **Android 10.0 or later**.
- Matter Hub: A compatible Matter controller (such as Apple HomePod mini) is required for remote control and automations.
- Wi-Fi Network: Your device supports **2.4 GHz and 5 GHz** Wi-Fi networks (IEEE 802.11 b/g/n/ac).
  - Use **WPA2 or WPA3** encryption for a secure connection.
  - Captive portal networks (commonly used in hotels, cafes, or airports that require a web-based login) aren't supported.

- Bluetooth: Turn on Bluetooth on your phone before connecting.

Using a Home Hub

A compatible home hub **(such as a HomePod or Apple TV 4K running tvOS 16.1 or later)** acts as the brain of your smart home, enabling remote control and automations by securely connecting your devices to the network.

Features of Using a Hub

- **Remote Access**: Control your device and check its status from anywhere in the app.
- **Real-time Notifications**: Receive instant alerts on your phone when the device is operated or an event occurs.
- **Automations**: Connecting multiple IoT devices allows you to create customized scenes and routines tailored to specific situations or times of day (for example, turning on the lights when you arrive home).

Note

- The hub must remain powered on and connected to a stable Wi-Fi network at all times.
- For the best connection, keep a clear line of sight between the device and your always-on hub.
- A Matter-compatible Thread Border Router hub is required to connect the thermostat to the app and use smart features, including remote control, automations, and settings customization.

Connecting via Apple Home App

You can connect your device using the **Apple Home** app. Use **NFC** for the fastest setup. It works even when the device is powered off.

Note

- A Matter-compatible Thread Border Router hub is required to connect the thermostat to the app and use smart features, including remote control, automations, and settings customization.
- Make sure your **Matter Hub** is powered on and connected to the internet.
- Your iPhone and hub must be on the same Wi-Fi network.
- Keep the device, iPhone, and hub within close range of each other during setup.

Connecting via NFC

Follow the steps below to connect your device using NFC.

1. Hold the iPhone's NFC antenna near the NFC symbol on the product. If a setup card appears automatically, tap **Set Up**.



2. Assign a room and a name for the device. The device is added to the Home app and appears as **Connect to Network**.
3. If the product is not already powered on, connect it to a power source.
4. After a short time, **Optimize for Energy Savings** appears at the bottom of the Home app.
5. Tap **Optimize for Energy Savings** and then follow the on-screen instructions to finish the setup, including recording options.
6. The device is added automatically after a short time.

Note

- If NFC connection fails, remove your phone case and try again. Thick or metallic cases may interfere with NFC recognition.
- This feature is supported only on phones manufactured by Apple.

Connecting Manually

You can connect your device manually. Choose the method below that your device supports.

1. Enable Bluetooth on your iPhone and then connect it to the same Wi-Fi network as your hub.
2. Press and hold the **Option Button** for 3 seconds.

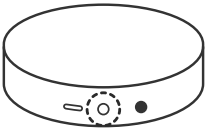

3. Open the **Apple Home** app, tap **+** in the top-right corner and then tap **Add Accessory**.
4. Scan the Matter QR code on the device, or use the printed label included in the manual box.

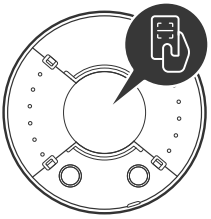

5. If the connection isn't completed using the methods above, tap **More Options...**, and then add the device in one of the following ways:
   - Select the device you want to add from the **Nearby Accessories** list.
   - Enter the setup code (shown below the Matter QR code) in the blank boxes, and then tap **Continue**.
6. Set the room location and name, and then complete the device connection.

Note

- The device must be powered on to connect.
- If NFC connection fails, remove your phone case and try again. Thick or metallic cases may interfere with NFC recognition.

Connecting via LG ThinQ App (US Only)

You can connect your device using the **LG ThinQ** app. Use NFC for the fastest setup.

Note

- A Matter-compatible Thread Border Router hub is required to connect the thermostat to the app and use smart features, including remote control, automations, and settings customization.
- Make sure your **Matter Hub** is powered on and connected to the internet.
- Your phone and hub must be on the same Wi-Fi network.
- Keep the device, phone, and hub within close range of each other during setup.

1. Enable Bluetooth on your phone, and then connect it to the same Wi-Fi network as your hub.
2. Open the **LG ThinQ** app, tap **+** in the top-right corner and then tap **Add Product**. Select your device.
3. Make sure the device is installed and powered on, and then tap **I've turned it on**.
4. Hold your phone near the NFC area on the device, following the on-screen guide.



5. If NFC isn't available, tap **Add without NFC** and choose one of the following:
   - Scan QR: Scan the Matter QR code on the device or package.
   - Enter setup code: Enter the setup code printed on the device or package.

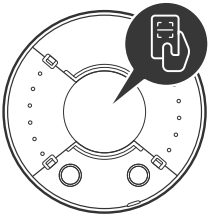

Note

- The device must be powered on to connect.
- If NFC connection fails, remove your phone case and try again. Thick or metallic cases may interfere with NFC recognition.

Operation

> **Warning**
>
> To reduce the risk of fire, electric shock, or injury to persons, read the **Important Safety Instructions** before operating this appliance.

Understanding the Display

The display changes based on your distance and activity.

Display Views

The display has two views:

- **Distance View**: Appears when you come within 14.8 ft (4.5 m).



- **Control View**: Appears when you move within 3.3 ft (1 m) or press any button.



Note

The display adjusts automatically:

- In Control View, the display returns to Distance View after 5 seconds.
- In Distance View, the display turns off when you move more than 14.8 ft (4.5 m) away.

Distance View

Distance View shows the current indoor temperature or the target temperature in a large font, so you can read it at a glance from a distance. The temperature shown depends on your **Distance View** setting in the app.

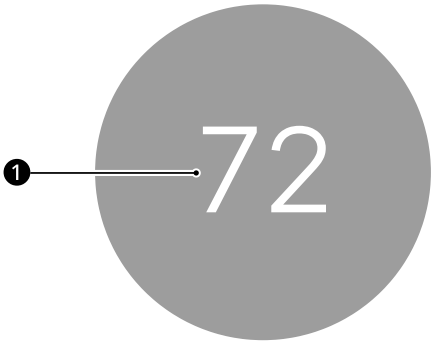

1 **Temperature**

Note

- When the system mode is set to **Off**, the Distance View shows only the current indoor temperature.
- The temperature appears in red during **Heating** and blue during **Cooling**.

Control View

Control View shows system status and lets you adjust the **Temperature**, **Mode**, and **Fan** settings.

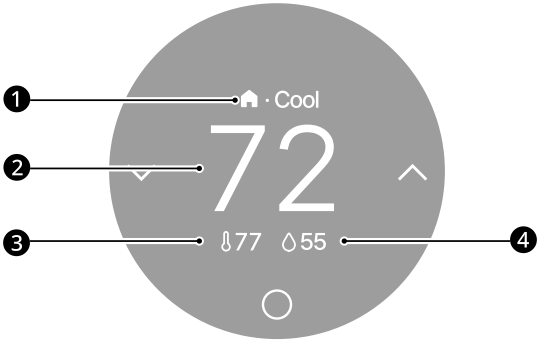

1. **System Status**

   Shows the current preset, mode, or activity.

2. **Target Temperature**

   Shows the temperature you set.

3. **Current Temperature**

   Shows the current indoor temperature.

4. **Humidity**

   Shows the current humidity level.

Note

Humidity appears only when a humidity accessory is connected and **Show Humidity** is turned on in **Display Settings** in the app.

Note

In **Auto** mode, the target temperature shown depends on system activity:

- **Heating**: Shows the target temperature for heating.
- **Cooling**: Shows the target temperature for cooling.
- When idle: Shows the most recent target temperature.

Use the Menu Button

Press the **Menu** button repeatedly to cycle through the **Temperature**, **Mode**, and **Fan** settings.

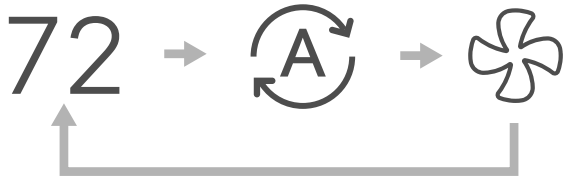

Note

When the thermostat is not paired, a pairing prompt appears after the **Fan** setting.

- To pair, hold your phone near the front of the thermostat.
- To turn off pairing prompts, press ∧ or ∨ to choose **Turn Off** and then press the **Menu** button.

System Status

The top of Control View shows the current system status.

When a preset is active, it shows the preset icon. While heating or cooling is active, it shows the current activity. When the indoor temperature reaches the target temperature, it shows the current mode.

> **Note**
>
> These alerts alternate with the current status:
>
> - **Pair Phone**: The thermostat is not paired with a phone. Pair it to enable remote control.
> - **No Wi-Fi**: The thermostat is not connected to a Wi-Fi network. The alert disappears when the connection is restored.

Preset

When a preset is active, the preset icon appears at the top of the display. Presets are available only in **Auto** mode.

- **Home**: For when you're home.
- **Away**: For when no one is home.
- **Sleep**: For sleeping.
- **Vacation**: For extended time away.

Mode

System mode controls how your thermostat manages heating and cooling.

- **Heat**: Runs the heating system when the indoor temperature drops below your target.
- **Cool**: Runs the cooling system when the indoor temperature rises above your target.
- **Auto**: Automatically switches between heating and cooling to maintain a set temperature range.
- **Off**: Heating and cooling stop. The display shows only the current indoor temperature.

Activity

Activity shows your system's current status.

- **Heating**: Your heating system is running.
- **Cooling**: Your cooling system is running.
- **Fan On**: Only the fan is running (no active heating or cooling).

Note

The display alternates between the current activity and:

- Estimated time to target temperature (during heating or cooling)
- Remaining fan time (when Fan Duration is set in the app)
- Remaining compressor delay time (to protect the compressor when heating or cooling starts or stops)

During a compressor delay, the display shows **Heat Off** or **Cool Off** when heating or cooling stops.

Adjusting the Temperature

There are three ways to change the target temperature: adjust it directly on the thermostat or in the app, switch to a different preset, or change the mode.

When adjusting the temperature, it changes in 1 °F or 0.5 °C increments based on your **Temperature Unit** setting in the app.

To see what the display shows while adjusting, see *System Status*.

> **Note**
>
> - When you change the temperature manually, a Hold activates and overrides your regular schedule. To release a Hold, press and hold the **Menu** button for 3 seconds.
> - When you change the target temperature, heating or cooling may not start immediately. The display shows the remaining wait time. The system starts automatically when it's ready.

On the Thermostat

When you're within 3.3 ft (1 m) or press any button, Control View appears and shows the target temperature.

- **Single Adjustment:** Press ∧ to raise or ∨ to lower the target temperature.
- **Continuous Adjustment:** Press and hold ∧ or ∨ to change the target temperature continuously.

> **Note**
>
> **Temperature Limits:** When you reach the limit, a message appears at the bottom of the display for 3 seconds.
>
> - **Heat mode:** 50 °F – 86 °F (10 °C – 30 °C)
> - **Cool mode:** 61 °F – 90 °F (16 °C – 32 °C)

Understanding Temperature Priority

Your thermostat sets the target temperature in this order:

1. **Manual setting** (highest priority): Overrides all other settings and activates a Hold. The thermostat maintains this temperature until the Hold expires or you cancel it.
2. **Preset**: The active preset temperature overrides the mode temperature.
3. **Mode** (lowest priority): The mode temperature applies when no Hold or preset is active.

> **Note**
>
> When the system mode is set to **Off**, you can't use presets or change the temperature. Switch to another mode first.

Changing the System Mode

The system mode sets how your thermostat controls your home's temperature. Choose **Heat**, **Cool**, **Auto**, or **Off**.

Changing the mode doesn't interrupt your current schedule or start a **Hold**.

On the Thermostat

1. Press the **Menu** button repeatedly until the **Mode** screen appears.
2. Press ∧ or ∨ to cycle through the available modes:

   Heat ↔ **Cool** ↔ **Auto** ↔ **Off**

> **Note**
>
> Your settings are saved automatically when you press the **Menu** button to cycle to the next setting or when the display returns to Distance View.

Understanding System Modes

The available modes depend on your HVAC system. Cooling-only or heating-only systems don't display **Auto**.

- **Heat**: Runs the heating system when the indoor temperature drops below your target.
- **Cool**: Runs the cooling system when the indoor temperature rises above your target.
- **Auto**: Automatically switches between heating and cooling to maintain a set temperature range.
- **Off**: Use this when you'll be away from home for a long time. All scheduled heating and cooling stop, but the thermostat continues to display the current temperature. You can still control the fan while the thermostat is in **Off** mode.

Auto Mode Requirements

To prevent your heating and cooling systems from running at the same time, **Auto** mode requires a minimum temperature gap.

- **Temperature Gap:** Heating and cooling temperatures must stay at least 2 °F (1 °C) apart.
- **Default Settings:** When you first switch to **Auto**, the system defaults to 68 °F (20 °C) for heating and 79 °F (26 °C) for cooling.

Changing the Fan Settings

The fan usually runs automatically when heating or cooling is active.

> **Note**
>
> If your system has a G wire, you can run the fan independently. If your system doesn't have a G wire, the fan runs only when heating or cooling is active.

You can adjust the fan at any time without affecting your current temperature schedule or starting a Hold.

On the Thermostat

1. Press the **Menu** button repeatedly until the **Fan** screen appears.
2. Press ∧ or ∨ to choose a fan setting.

> **Note**
>
> Your setting is saved automatically when you press the **Menu** button to cycle to the next setting or when the display returns to Distance View.

Understanding Fan Settings

The available fan options depend on your HVAC system.

Single-Speed Fan

- **Auto (default):** The fan runs only when heating or cooling is active.
- **On:** The fan runs continuously to circulate air.

Multi-speed fan

- **Auto (default):** The fan runs only when heating or cooling is active.
- **Low:** The fan runs continuously at low speed.
- **High:** The fan runs continuously at high speed.

Note

When the system mode is set to **Off**:

- **Auto**: The fan remains off.
- **On**, **Low**, or **High**: The fan runs continuously.

When the fan runs continuously, the display shows **Heating** or **Cooling** based on the indoor temperature, and shows **Fan On** when the target temperature is reached.

Using the Option Menu

The Option menu provides reset and pairing functions. Available options depend on your thermostat's pairing status. To open the menu, press and hold the **Option** button for 3 seconds.

> **Note**
>
> - After 10 seconds of no activity, the display returns to Distance View.
> - To cancel and return to the previous screen, choose **Cancel**, and then press the **Menu** button.

Remove Phone

Use this when switching to a new account or connecting to a different router. This option deletes all Wi-Fi and Matter connections and clears your schedules.

1. Press and hold the **Option** button for 3 seconds.
2. Press ∧ or ∨ to choose **Remove Phone** and then press the **Menu** button.
3. Press ∧ or ∨ to choose **Remove** and then press the **Menu** button.

The thermostat turns off and restarts. To pair again, see *Pair Phone*.

Pair Phone

When the thermostat is not paired, this option appears in the Option menu. Use this to start pairing directly from the thermostat.

1. Press and hold the **Option** button for 3 seconds.
2. Press ∧ or ∨ to choose **Pair Phone** and then press the **Menu** button.
3. Hold your phone near the front of the thermostat.
4. Continue setup in the app.

> **Note**
>
> If no phone connects within 3 seconds, the display returns to the previous screen.

Factory Reset

Use this before transferring ownership to a new resident or when troubleshooting requires a fresh start. This option erases all settings, schedules, and connection data and returns the thermostat to its original state.

> **Note**
>
> Factory Reset can't be undone.

1. Press and hold the **Option** button for 3 seconds.
2. Press ∧ or ∨ to choose **Factory Reset** and then press the **Menu** button.
3. Press ∧ or ∨ to choose **Reset** and then press the **Menu** button.

When the reset is complete, the thermostat turns off and restarts. See *Initial Setup*.

> **Note**
>
> Don't turn off power to the thermostat during the reset. If power is interrupted, the reset resumes automatically when power is restored.

Apple Home Application Features

Communicate with the device from a smartphone using the convenient smart features.

- **Temperature Setpoint Selection**
  Control your home's temperature. Adjust the target temperature up or down.
- **Mode Select**
  Control how your home is heated or cooled. Choose from **Heat**, **Cool**, **Auto**, or **Off**.
- **Hold Duration**
  Set the default Hold duration when a Hold is activated.
- **Fan Control**
  Set **Fan Mode** and **Fan Duration** based on your system's available settings.
- **Device Name**
  Change the name of the device as it appears in the app.
- **Temperature Unit**
  Switch the display between Fahrenheit and Celsius.
- **Adaptive Temperature**
  Automatically adjusts the temperature based on your routine and room occupancy. It switches modes and preconditions your home by predicting your arrival.
- **Circulate Air**
  Set the fan to circulate air every hour at a specific speed and duration.
- **Humidifier**
  Turn the humidifier on or off and set the target humidity level.
- **Dehumidifier**
  Turn the dehumidifier on or off and set the target humidity level.
- **Sensor Priority**
  Set the priority of temperature sensors used to control heating and cooling.
- **Clean Energy Guidance**
  Makes small temperature adjustments when cleaner energy sources are less available to help reduce electricity usage.
- **Display Settings**
  Adjust **Brightness**, **Distance View**, **Show Humidity**, and **Language** settings.
- **Temperature Calibration**
  Adjust the temperature reading to match another thermostat or sensor.

- **System Configuration**
  Review or reconfigure your HVAC system configuration, including wiring, system type, and accessories.
- **Room**
  Assign the device to a room in your home.
- **Energy Insight**
  Monitor how long your heating and cooling systems have been running. View daily, weekly, and monthly runtime reports and track energy trends over time.
- **Accessory Information**
  View product details, including serial number, manufacturer name, model name and firmware version.
- **Logs**
  Collect and send diagnostic logs to customer support.
- **Remove Accessory**
  Remove the Accessory from your account.

Note

- If you change your wireless router, Internet service provider, or password, delete the device from the **Apple Home** app and connect it again.
- This information is current at the time of publication. The app is subject to change for product improvement purposes without notice to users.

LG ThinQ Application Features (US Only)

Communicate with the device from a smartphone using the convenient smart features.

- **Presets Card**
  View and change your current temperature state from the preset card. The card shows your active preset (**Home**, **Away**, **Sleep**, or **Vacation**) or **Holding** when a Hold is active.
- **Temperature**
  Control your home's temperature. Adjust the target temperature up or down.
- **Thermostat Mode**
  Control how your home is heated or cooled. Choose from **Heat**, **Cool**, **Auto**, or **Off**.
- **Fan**
  Set **Fan Mode** and **Fan Duration** based on your system's available settings.
- **Schedule**
  Set up repeating schedules to automatically adjust presets and system modes by day and time.
- **Monitoring**
  Monitor how long your heating and cooling systems have been running. View daily, weekly, and monthly runtime reports and track energy trends over time.
- **Device Name**
  Change the name of the device as it appears in the app.
- **Room**
  Assign the device to a room in your home.
- **Set Temperature Presets**
  Set the desired temperature for each preset.
- **Hold Operation Setting**
  Set the default Hold duration when a Hold is activated.
- **Circulate Air**
  Set the fan to circulate air every hour at a specific speed and duration.
- **Display Settings**
  Adjust **Display Brightness**, **Night Mode**, **Distance View**, **Temperature Unit**, **Show Humidity** and **Language** settings.
- **Set Target Humidity**
  Set your preferred indoor humidity level.
- **Temperature Calibration**
  Adjust the temperature reading to match another thermostat or sensor.
- **System Configuration**
  Review or reconfigure your HVAC system configuration, including wiring, system type, and accessories.

- **Matter Device Sharing**
  Share the device with other Matter-compatible platforms.
- **Product Information**
  View product details, including model name, serial number, connection type, and software version.
- **Advanced Settings**
  Access additional device settings.
- **Maintenance**
  View filter replacement reminders and reset options.

Note

- If you change your wireless router, Internet service provider, or password, delete the device from the **LG ThinQ** app and connect it again.
- This information is current at the time of publication. The app is subject to change for product improvement purposes without notice to users.

Maintenance

Cleaning the Device

Clean the device regularly to maintain its appearance and performance.

- Use a soft, dry, lint-free cloth or rag to gently wipe the device.
- Keep the display clean and unobstructed. Dust or residue may affect occupancy detection.

⚠ Caution

- Do not use water, wet cloths, liquid detergents, spray cleaners, solvents, or abrasive materials to clean the device. Moisture or chemicals may damage the surface and internal electronics.
- Do not block or insert objects into the sensor opening on the bottom of the thermostat. Keep the opening free of dust and debris for accurate temperature and humidity readings.

Firmware Updates

Review the following items once a year or after any HVAC service.

Checking the Firmware Version

In the Apple Home app, tap your thermostat and then tap **Firmware Updates**. **Firmware Update Status** shows the current firmware version and update status.

Firmware Updates

The thermostat automatically installs firmware updates over Wi-Fi when the system is idle, typically at night. Firmware updates improve performance, add new features, and address security issues.

To start an update manually, open the Apple Home app and tap **Firmware Updates**.

The update downloads and installs in the background. The thermostat restarts when complete, and a notification appears on the display.

Your settings are preserved after the update.

Do not turn off power to the thermostat during a firmware update.

Troubleshooting

Before Calling for Service

If the thermostat does not work as expected, find the symptom below and check the possible causes before requesting service.

The thermostat does not turn on	
The thermostat may not be securely attached to the Base Plate.	Firmly press the thermostat onto the **Base Plate** until you hear a click.

The thermostat does not stay secured to the Base Plate	
Overtightening the screws may warp the Base Plate, preventing the thermostat from seating properly or causing it to detach easily.	Slightly loosen the screws on the **Base Plate**, and then press the thermostat onto the **Base Plate** until you hear a click.

The Wi-Fi connection drops frequently	
The router signal may be weak, or a temporary network error may have occurred on the thermostat or hub.	Restart the router, or make sure the thermostat and hub are within Wi-Fi range.

The displayed indoor temperature is inaccurate	
Direct sunlight, heat sources, or air vents near the thermostat can affect temperature readings.	Move the thermostat away from heat sources, air vents, and direct sunlight.
A blocked sensor opening may prevent accurate measurements.	Clean any dust or debris from the sensor opening with a soft, dry cloth.

Heating or cooling does not work	
The wiring configuration may be incorrect, or the system type selected during Initial Setup may not match your actual HVAC system.	• Make sure the wiring matches your actual HVAC system. • Make sure the system type (Heat Pump, Conventional, etc.) in System Configuration matches your actual system. • If it's incorrect, perform a **Factory Reset**, and then run **Initial Setup** again.

Heating or cooling does not reach the target temperature

Thermostat settings or your heating or cooling system's condition may prevent the temperature from being reached or cause delays.

- Check the thermostat mode and target temperature settings.
- If the target temperature still isn't reached after extended operation, check your HVAC system or contact the Customer Information Center.

Heating and cooling are reversed

The HVAC system type or wiring configuration may not match your actual setup.

- Check the HVAC system settings and wiring connections on the thermostat.
- If the problem persists, perform a **Factory Reset**, and then run **Initial Setup** again.

The thermostat display does not turn off

Movement may be detected near the Thermostat.

- Make sure there is no movement near the thermostat, and wait a moment for the display to turn off.

You want to change the temperature unit (°C, °F)

The Thermostat displays temperature in Fahrenheit by default. You can change the Temperature Unit in the app.

- Connect the thermostat to the app, and then change the **Temperature Unit** in the app's Settings menu.

You want to change the display language

You can change the display language in the app or during Initial Setup.

- Change the **Language** in the app's Settings menu.
- Perform a **Factory Reset**, and then run **Initial Setup** again.

You want to show or hide the humidity information on the display

The Thermostat displays temperature only by default. You can turn the humidity display on or off in the App.

Connect the thermostat to the App, and then change the humidity display setting in the app's Settings menu.

You want to adjust the display brightness

You can change the display brightness in the app.

Connect the thermostat to the App, and then adjust the display brightness in the app's Settings menu.

You want to know which temperature is shown in distance view	
The temperature shown depends on your **Distance View** setting in the app.	Go to the **Distance View** menu in the app's Settings, and then select Automatic, Current Temperature, or Target Temperature.

The thermostat does not appear in the app	
The thermostat may not be connected to the app, or there may be a problem with your network.	Check the connection status of the thermostat and the Wi-Fi connection, and connect the thermostat to the app again if necessary.

The status information is not updated in the app	
There may be a temporary network delay or server connection error.	Refresh the app, and then check the network connection of the thermostat.

Remote control does not work in the app	
The thermostat may be offline, or the internet connection may be unstable.	Check the Wi-Fi connection of the thermostat.

The temperature in the app differs from the temperature on the thermostat	
Data synchronization between the app and the thermostat may be delayed.	Refresh the app, and then check again after a moment.

An error message appears on the thermostat	
The thermostat has detected a specific problem.	Check the error message, and then contact the Customer Information Center if the problem persists.

The thermostat does not respond	
A temporary software error or a system problem may have occurred.	Detach the thermostat from the **Base Plate**, and then attach it again to restart the thermostat.

The thermostat settings are not saved correctly	
A temporary error may have occurred while saving the settings.	Save the settings again, and then check whether they are applied.

You want to reset the thermostat	
You may need to reconfigure your network or HVAC settings.	Perform a **Factory Reset**, and then connect the thermostat to the app and run **Initial Setup** again.

You want to use the air circulation feature	
You can use the air circulation feature by changing the fan mode.	Change the fan mode on the thermostat to use the air circulation feature.

The weekly schedule does not work	
The weekly schedule feature may be disabled, or the scheduled times may be incorrect.	Check the schedule settings and whether the weekly schedule feature is enabled in the app, and then save the settings again.

The target temperature changed while you were away	
The weekly schedule or a smart routine may have run.	Check the schedule and smart routine settings in the app.

You have changed your Wi-Fi password	
The previous Wi-Fi information is still stored on the thermostat.	Reset the connection, and then connect the thermostat to the app again.

The firmware update does not proceed	
The network connection may be unstable.	Check the Wi-Fi connection, and then try again.

The thermostat cannot connect to the hub	
The hub is not compatible with the thermostat.	This thermostat is a Matter device. It can only be connected to a hub that supports Matter and Thread Border Router.
There is an obstruction between the hub and the thermostat.	• Check whether a wall, structure, or metal object is blocking the signal between the thermostat and the hub. • Remove the obstruction, or move the hub closer to the thermostat, and then connect again.
The thermostat suddenly went offline while connected to the hub.	Reset the thermostat, and then set up the connection again.

The thermostat cannot be connected to the app	
Bluetooth is turned off on the smartphone.	Turn on Bluetooth on your smartphone.
The smartphone is not connected to the Wi-Fi router that was used to connect the hub.	Turn on Wi-Fi on your smartphone, and connect to the same router that the hub was connected to.
The thermostat is not in pairing mode.	Put the thermostat in pairing mode to connect it to the app.

The thermostat is shown as offline in the app	
The thermostat has been reset.	• If you reset the thermostat while it is connected to the app, the thermostat is shown as offline in the app. • Delete the thermostat from the app, and then add it again.

The thermostat cannot be controlled or its settings cannot be changed in the app	
The thermostat is disconnected in the app.	Check the connection status of the thermostat and the hub in the app.

Past history is not shown in the app	
The maximum storage period of the app has been exceeded.	The app stores the history for up to 3 months.

Smart routines do not work	
A device registered to the routine is not powered on or is not connected to the network.	Check the power and network connection status of every device registered to the smart routine.

You installed a C-wire adapter, but the HVAC system is not working

The HVAC system fuse may have blown due to an incorrect C-wire adapter installation.

- Turn off power to your furnace before touching any wires.
- Locate the low-voltage fuse on your furnace control board (usually 3 or 5 amps), pull it out, and if needed, replace it with a new fuse of the exact same amperage.
- Make sure you connected the wires properly from the C-wire adapter to the HVAC control board.
- If your HVAC system has an A2L refrigerant leak detection system, make sure the C-wire adapter is installed between the HVAC control board and the thermostat, not between the control board and the A2L leak detection board.
- Turn the power back on to your furnace.

Appendix

Supported Wiring

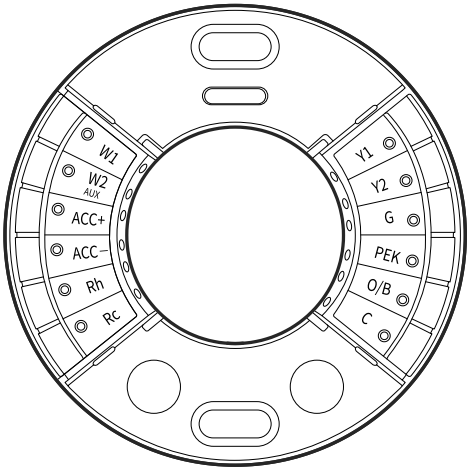

Supported Wiring Combination Patterns

HVAC System Type	Supported Terminal Combination
1-stage heating only	RH, W1
1-stage heating only with fan	RH, W1, G
1-stage cooling only	RC, Y1, G
1-stage conventional heating/cooling	RH / RC, W1, Y1, G
2-stage heating / 1-stage cooling	RH / RC, W1, W2, Y1, G
1-stage heating / 2-stage cooling	RH / RC, W1, Y1, Y2, G
2-stage conventional heating/cooling	RH / RC, W1, W2, Y1, Y2, G
1-stage heat pump	RH / RC, Y1, G, O/B
1-stage heat pump with auxiliary heat	RH / RC, Y1, G, O/B, W2/AUX
2-stage heat pump with auxiliary heat	RH / RC, Y1, Y2, G, O/B, W2/AUX
Fan-only system	RH / RC, G

Note

- Line-voltage systems (120 V / 240 V baseboard heaters) are not compatible.
- Millivolt systems are not compatible.
- Stranded wire is not compatible with the thermostat's terminal connectors. Use solid wire only.
- Terminal usage may vary by system configuration. Depending on the HVAC system, RH and RC may be connected to a single transformer or to separate heating and cooling transformers.

Optional Terminal Additions

The terminal combinations above may optionally include the following, depending on system configuration:

Optional Terminal	Description
C	Common wire for continuous power
PEK	Power Extender Kit connection when a common wire is not available
ACC+ / ACC–	Accessory control for devices such as a humidifier or dehumidifier

> **Note**
>
> The actual wiring configuration depends on the HVAC system type, staging, and installed accessories. Optional terminals such as **C**, **PEK**, and **ACC+ / ACC–** may be included in addition to the base terminal combination shown above.

Summary of Wiring Rules

- **Heating Only**: Includes **W**, excludes **Y**.
- **Cooling Only**: Includes **Y**, excludes **W**.
- **Heat Pump**: **O/B** is usually required.
- **Conventional** (non-heat pump): **O/B** is usually not used.
- **2-Stage Systems**: Use **W2** or **Y2**.
- **ACC**: Optional.
- **C & PEK**: Generally interchangeable (alternatives).

Product Specifications

Review the following specifications for detailed product information.

Item	Specification
Model	TMCTAW5*
Dimensions (Diameter x Depth)	Thermostat: Ø 3.5 in x 0.8 in (Ø 89.5 mm x 20.4 mm) Base Plate: Ø 3.3 in x 0.3 in (Ø 84.6 mm x 8.1 mm) Trim Plate: Ø 6.3 in x 0.21 in (Ø 160 mm x 5.3 mm)
Weight	Thermostat: 3.7 oz (106 g) Base Plate: 0.85 oz (24 g) Trim Plate: 2.2 oz (61.4 g)
Display Size	2.4 in (61 mm)
Sensors	Radar Sensor for Motion Detection Temperature & Humidity Sensor Ambient Light Sensor
Power Supply	24 VAC, 50/60 Hz (Class 2)
Power Consumption	Up to 4 VA
Operating Environment	Indoor Use Only
Operating Temperature	32 °F to 104 °F (0 °C to 40 °C)
Operating Humidity	0 % – 95 %
Storage Temperature	-4 °F to 140 °F (-20 °C to 60 °C)
Storage Humidity	Up to 95 %
Operating Altitude	Up to 9,842 ft (3,000 m)
Temperature/Humidity Sensing Resolution	±1 °C / ±5 %
System Compatibility	Compatible with most 24 VAC HVAC systems, including: • Conventional systems (up to 2Heat / 2Cool) • Multi-stage heating and cooling systems • Heat pump systems (with auxiliary heat) • Boilers and radiant systems • Fan control systems

Warranty

Limited Warranty - USA
ARBITRATION NOTICE: THIS LIMITED WARRANTY CONTAINS AN ARBITRATION PROVISION THAT REQUIRES YOU AND LG ELECTRONICS ("LG") TO RESOLVE DISPUTES BY BINDING ARBITRATION INSTEAD OF IN COURT, UNLESS YOU CHOOSE TO OPT OUT. IN ARBITRATION, CLASS ACTIONS AND JURY TRIALS ARE NOT PERMITTED. PLEASE SEE THE SECTION TITLED "PROCEDURE FOR RESOLVING DISPUTES" BELOW. Should your LG Smart Thermostat ("Product") fail due to a defect in material or workmanship under normal use, during the warranty period ("Warranty Period") set forth below, LG will, at its option either repair or replace the Product upon receipt of original Proof of Purchase ("POP"). This limited warranty is valid only to the original retail purchaser of the Product ("Customer" or "You") and applies only when purchased lawfully and used within the United States including U.S. Territories.

WARRANTY PERIOD:	HOW SERVICE IS HANDLED:
Parts and Labor: One (1) Year from date of delivery of original retail purchase, or from the date of delivery as per applicable law	The original sales invoice and delivery receipt specifying the Product and date of purchase and delivery is required to obtain warranty service. For any service-related inquiries, including troubleshooting assistance, visit www.lg.com or call 1-800-243-0000, or write to: ATTN: LG Customer Interactive Center 201 James Record Road SW Huntsville, Alabama 35824 **Shipping Costs** In-bound and out-bound shipping will be paid by LG during the Warranty Period.

NOTE

- Repaired or Replacement Products and parts are warranted for the remaining portion of the original warranty period or ninety (90) days, whichever is greater.
- Replacement Products and parts may be new, reconditioned, refurbished, or otherwise factory remanufactured.
- Replaced Product or part(s) will be the property of LG.
- If the original date of purchase cannot be verified, the warranty will begin on the 1st day of the manufacture month.

Disclaimer:

EXCEPT TO THE EXTENT PROHIBITED BY APPLICABLE LAW, ANY IMPLIED WARRANTY OF MERCHANTABILITY OR FITNESS FOR A PARTICULAR PURPOSE ON THE PRODUCT IS LIMITED IN DURATION TO THE DURATION OF THE ABOVE LIMITED WARRANTY. UNDER NO CIRCUMSTANCE SHALL LG BE LIABLE FOR ANY INCIDENTAL, SPECIAL, CONSEQUENTIAL OR PUNITIVE DAMAGES INCLUDING, WITHOUT LIMITATION, LOST GOODWILL, LOST REVENUE OR PROFITS, WORK STOPPAGE, PRODUCT FAILURE, IMPAIRMENT OF OTHER GOODS, LOSS OR CORRUPTION OF PROGRAMMING OR DATA, LOSS OF USE, INJURY TO PERSONS OR PROPERTY ARISING OUT OF OR RELATED TO THE PRODUCT. LG'S TOTAL LIABILITY, IF ANY, SHALL NOT EXCEED THE PURCHASE PRICE PAID BY YOU FOR THE PRODUCT.

SOME STATES DO NOT ALLOW THE EXCLUSION OR LIMITATION OF INCIDENTAL OR CONSEQUENTIAL DAMAGES, OR ALLOW LIMITATIONS ON HOW LONG AN IMPLIED WARRANTY LASTS, SO THE ABOVE LIMITATIONS OR EXCLUSIONS MAY NOT APPLY TO YOU. THIS LIMITED WARRANTY GIVES YOU SPECIFIC LEGAL RIGHTS. YOU MAY ALSO HAVE OTHER RIGHTS THAT VARY FROM STATE TO STATE.

THIS LIMITED WARRANTY DOES NOT COVER:

- Service trips to deliver, pick up, or install, educate how to operate, correct wiring, or correct unauthorized repairs.
- Damage or loss to programs, data, or removable storage media.
- Damage or failure of the Product when used in other than normal intended use.
- Damage or failure of Product caused by incorrect electrical current or voltage (including power surge), power failures, power interruptions or inadequate electrical service, including incorrect or insufficient AC supply.
- Damage or failure of the Product resulting from improper set-up, adjustment, or operation of the Product contrary to the Product owner's manual.
- Damage or failure of the Product caused by accidents, pests and vermin, lightning, wind, fire, flood, or other acts of nature.
- Damage or failure of the Product caused by abnormal conditions or an environment where the temperature and humidity is not adequately controlled.
- Damage or failure of the Product resulting from misuse, abuse, unauthorized service, or improper maintenance.
- Damage or failure of the Product caused by the use of accessories, parts, consumable cleaning products, or services, that are not provided or approved by LG.
- Damage or failure of the Product caused by unauthorized alternation, modification or incorporation into any other product or system components.
- Damage or failure of the Product, or missing items to any Product sold "As Is", "With all Faults" or similar disclaimer.
- Damage or failure of the Product caused by transportation and/or handling, including scratches, dents, chips, and/or other damage to the finish of your Product, unless such damage results from a defect in materials or workmanship and is reported within one (1) week of delivery (Call: 1-800-243-0000).
- Products used for other than normal and proper household use (e.g., commercial or industrial use).
- Products with original serial numbers that have been removed, altered, or cannot be readily determined.
- Increases in utility cost and additional utility expenses.
- Replacement of any consumable parts including batteries.
- Minor imperfections that do not materially alter or affect functionality.

The cost of repair or replacement under the above excluded circumstances shall be borne by you.

ARBITRATION PROCEDURE FOR RESOLVING DISPUTES

ALL DISPUTES BETWEEN YOU AND LG ARISING OUT OF OR RELATING IN ANY WAY TO THIS LIMITED WARRANTY OR THE PRODUCT SHALL BE RESOLVED EXCLUSIVELY THROUGH BINDING ARBITRATION, AND NOT IN A COURT OF GENERAL JURISDICTION. BINDING ARBITRATION MEANS THAT YOU AND LG ARE EACH WAIVING THE RIGHT TO A JURY TRIAL AND TO BRING OR PARTICIPATE IN A CLASS ACTION.

Definitions. For the purposes of this section, references to "LG" mean LG Electronics U.S.A., Inc., its parents, subsidiaries and affiliates, and each of their officers, directors, employees, agents, beneficiaries, predecessors in interest, successors, assigns and suppliers; references to "dispute" or "claim" shall include any dispute, claim or controversy of any kind whatsoever (whether based in contract, tort, statute, regulation, ordinance, fraud, misrepresentation or any other legal or equitable theory) arising out of or relating in any way to the sale, condition or performance of the product or this Limited Warranty.

Notice of Dispute. In the event you intend to commence an arbitration proceeding, you must first notify LG in writing at least 30 days in advance of initiating the arbitration by sending a letter to LG at LG Electronics, USA, Inc. Attn: Legal Department-Arbitration 111 Sylvan Avenue, Englewood Cliffs, NJ 07632. You and LG agree to engage in good faith discussions in an attempt to amicably resolve your claim. The notice must provide your name, address, and telephone number; identify the product that is the subject of the claim; and describe the nature of the claim and the relief being sought. If you and LG are unable to resolve the dispute within 30 days, either party may proceed to file a claim for arbitration.

Agreement to Binding Arbitration and Class Action Waiver. Upon failure to resolve the dispute during the 30-day period after sending written notice to LG, you and LG agree to resolve any claims between us only by binding arbitration on an individual basis, unless you opt out as provided below. Any dispute between you and LG shall not be combined or consolidated with a dispute involving any other person's or entity's product or claim. More specifically, without limitation of the foregoing, any dispute between you and LG shall not under any circumstances proceed as part of a class or representative action. Instead of arbitration, either party may bring an individual action in small claims court, but that small claims court action may not be brought on a class or representative basis.

Arbitration Rules and Procedures. To begin arbitration of a claim, either you or LG must make a written demand for arbitration. The arbitration will be administered by the American Arbitration Association ("AAA") and will be conducted before a single arbitrator under the AAA's Consumer Arbitration Rules that are in effect at the time the arbitration is initiated (referred to as the "AAA Rules") and under the procedures set forth in this section. The AAA Rules are available online at www.adr.org/consumer. Send a copy of your written demand for arbitration, as well as a copy of this provision, to the AAA in the manner described in the AAA Rules. You must also send a copy of your written demand to LG at LG Electronics, USA, Inc. Attn: Legal Department-Arbitration 111 Sylvan Avenue, Englewood Cliffs, NJ 07632. If there is a conflict between the AAA Rules and the rules set

forth in this section, the rules set forth in this section will govern. This arbitration provision is governed by the Federal Arbitration Act. Judgment may be entered on the arbitrator's award in any court of competent jurisdiction. All issues are for the arbitrator to decide, except issues relating to the scope and enforceability of the arbitration provision and to the arbitrability of the dispute are for the court to decide. The arbitrator is bound by the terms of this provision.

Governing Law. The law of the state of your residence shall govern this Limited Warranty and any disputes between us except to the extent that such law is preempted by or inconsistent with applicable federal law.

Fees/Costs. You do not need to pay any fee to begin an arbitration. Upon receipt of your written demand for arbitration, LG will promptly pay all arbitration filing fees to the AAA unless you seek more than $25,000 in damages, in which case the payment of these fees will be governed by the AAA Rules. Except as otherwise provided for herein, LG will pay all AAA filing, administration, and arbitrator fees for any arbitration initiated in accordance with the AAA Rules and this arbitration provision. If You prevail in the arbitration, LG will pay your attorneys' fees and expenses as long as they are reasonable, by considering factors including, but not limited to, the purchase amount and claim amount. Notwithstanding the foregoing, if applicable law allows for an award of reasonable attorneys' fees and expenses, an arbitrator can award them to the same extent that a court would. If the arbitrator finds either the substance of your claim or the relief sought in the demand is frivolous or brought for an improper purpose (as measured by the standards set forth in Federal Rule of Civil Procedure 11(b)), then the payment of all arbitration fees will be governed by the AAA Rules. In such a situation, you agree to reimburse LG for all monies previously disbursed by it that are otherwise your obligation to pay under the AAA Rules. Except as otherwise provided for, LG waives any rights it may have to seek attorneys' fees and expenses from you if LG prevails in the arbitration.

Hearings and Location. If your claim is for $25,000 or less, you may choose to have the arbitration conducted solely on the basis of (1) documents submitted to the arbitrator, (2) through a telephonic hearing, or (3) by an in-person hearing as established by the AAA Rules. If your claim exceeds $25,000, the right to a hearing will be determined by the AAA Rules. Any in-person arbitration hearings will be held at a location within the federal judicial district in which you reside unless we both agree to another location or we agree to a telephonic arbitration.

Opt Out. You may opt out of this dispute resolution procedure. If you opt out, neither you nor LG can require the other to participate in an arbitration proceeding. To opt out, you must send notice to LG no later than 30 calendar days from the delivery/pick-up date of your purchase of the Product by either: (i) sending an e-mail to optout@lge.com, with the subject line: "Arbitration Opt Out" or (ii) calling 1-800-980-2973. You must include in the opt out e-mail or provide by telephone: (a) your name and address; (b) the date on which the product was delivered or picked up; (c) the product model name or model number; and (d) the serial number.

You may only opt out of the dispute resolution procedure in the manner described above (that is, by e-mail or telephone); no other form of notice will be effective to opt out of this dispute resolution procedure. Opting out of this dispute resolution procedure will not affect the coverage of the Limited

Warranty in any way, and you will continue to enjoy the full benefits of the Limited Warranty. If you keep this Product and do not opt out, then you accept all terms and conditions of the arbitration provision described above.

Any modifications or changes to this manual due to typographical errors or inaccuracies of stated information shall only be made by LG Electronics Inc.

LG Customer Information Center

For inquiries or comments,

visit www.lg.com or call:

1-800-243-0000 U.S.A.

Register your product Online!

www.lg.com

LG ELECTRONICS CANADA, INC. LIMITED WARRANTY - CANADA
ARBITRATION NOTICE: THIS LIMITED WARRANTY CONTAINS AN ARBITRATION PROVISION THAT REQUIRES YOU AND LG TO RESOLVE DISPUTES BY BINDING ARBITRATION INSTEAD OF IN COURT, UNLESS THE LAWS OF YOUR PROVINCE OR TERRITORY DO NOT PERMIT THAT, OR, IN OTHER JURISDICTIONS, IF YOU CHOOSE TO OPT OUT. FOR FURTHER CLARITY, THIS ARBITRATION PROVISION IS NOT APPLICABLE TO CONSUMERS RESIDING IN ONTARIO AND QUÉBEC. IN ARBITRATION, CLASS ACTIONS AND JURY TRIALS ARE NOT PERMITTED. PLEASE SEE THE SECTION TITLED "PROCEDURE FOR RESOLVING DISPUTES" BELOW.
QUEBEC ONLY: LG stands behind its products and makes every reasonable effort to ensure its products can be maintained and repaired, as required. You may access the catalogue of available parts and services at https://www.lg.com/ca_en/support/. HOWEVER, LG IN NO WAY GUARANTEES AND MAKES NO REPRESENTATIONS REGARDING THE AVAILABILITY OF ANY SPECIFIC SPARE OR REPLACEMENT PART, REPAIR SERVICE OR INFORMATION OR INSTRUCTIONS FOR SUCH MAINTENANCE AT ANY TIME. LG EXPRESSLY DISCLAIMS ANY GUARANTEE, WARRANTY OR OBLIGATION IN RESPECT OF THAT AVAILABILITY.
Should your LG Smart Thermostat ("Product") fail due to a defect in materials or workmanship under normal and proper use, during the warranty period set forth below, LG Electronics Canada, Inc. ("LGECI") will, at its option, repair, replace or pro rate the Product upon receipt of proof of the original retail purchase. This limited warranty is valid only to the original retail purchaser of the Product and applies only to a Product distributed, purchased from an authorized retailer and used within Canada, as determined at the sole discretion of LGECI.

	WARRANTY PERIOD
LG Smart Thermostat	One (1) year from the date of original retail purchase Parts and Labor (internal/ functional parts only)

Note: If the original date of purchase can not be verified, the warranty will begin sixty (60) days from the date of manufacture.

- Replacement products and parts are warranted for the remaining portion of the original warranty period or ninety (90) days, whichever is greater.
- Replacement products and parts may be new, reconditioned, refurbished, or otherwise factory remanufactured, all at the sole discretion of LGECI.

- Proof of original retail purchase specifying the Product model and date of purchase is required to obtain warranty service under this Limited Warranty.

Disclaimer:

IF YOU ARE A CONSUMER SUBJECT TO QUÉBEC, BRITISH COLUMBIA OR ONTARIO'S CONSUMER PROTECTION ACT, THE EXCLUSION OF WARRANTIES CONTAINED IN THIS SECTION DO NOT EXCLUDE OR LIMIT THE RIGHTS AND REMEDIES THAT YOU MAY HAVE UNDER SUCH ACT, INCLUDING THE RIGHT TO MAKE A CLAIM UNDER ANY OF THE STATUTORY WARRANTIES PROVIDED THEREUNDER.

LGECI'S SOLE LIABILITY IS LIMITED TO THE LIMITED WARRANTY SET OUT ABOVE, UNLESS SUCH LIMITATION IS PROHIBITED BY THE LAWS OF THE PROVINCE IN WHICH YOU RESIDE. EXCEPT AS EXPRESSLY PROVIDED ABOVE, OR IF OTHERWISE PROHIBITED BY THE LAW OF THE PROVINCE IN WHICH YOU RESIDE, LGECI DOES NOT MAKE ANY OTHER WARRANTIES OR CONDITIONS RESPECTING THE PRODUCT, AND HEREBY DISCLAIMS ALL OTHER WARRANTIES AND CONDITIONS RESPECTING THE PRODUCT, WHETHER EXPRESS OR IMPLIED, INCLUDING BUT NOT LIMITED TO, ANY IMPLIED WARRANTY OR CONDITION OF MERCHANTABILITY OR FITNESS FOR A PARTICULAR PURPOSE, AND NO REPRESENTATIONS SHALL BE BINDING ON LGECI. LGECI DOES NOT AUTHORIZE ANY PERSON TO CREATE OR ASSUME FOR IT ANY OTHER WARRANTY OBLIGATION OR LIABILITY IN CONNECTION WITH THE PRODUCT. TO THE EXTENT THAT ANY WARRANTY OR CONDITION IS IMPLIED BY LAW, IT IS LIMITED TO THE WARRANTY PERIOD SET OUT ABOVE. UNDER NO CIRCUMSTANCES SHALL LGECI, THE MANUFACTURER OR DISTRIBUTOR OF THE PRODUCT, BE LIABLE FOR ANY INCIDENTAL, CONSEQUENTIAL, SPECIAL, DIRECT, INDIRECT, PUNITIVE OR EXEMPLARY DAMAGES, INCLUDING, WITHOUT LIMITATION, LOSS OF GOODWILL, LOST PROFITS, LOSS OF ANTICIPATED PROFITS, LOST REVENUE, LOSS OF USE, OR ANY OTHER DAMAGE, WHETHER ARISING DIRECTLY OR INDIRECTLY FROM ANY CONTRACTUAL BREACH, FUNDAMENTAL BREACH, TORT OR OTHERWISE, OR FROM ANY ACTS OR OMISSIONS. LGECI'S TOTAL LIABILITY, IF ANY, SHALL NOT EXCEED THE PURCHASE PRICE PAID BY YOU FOR THE PRODUCT.

This Limited Warranty gives you specific legal rights. You may also have other rights that vary from province to province depending on applicable provincial laws. Any term of this Limited Warranty that negates or varies any implied condition or warranty under provincial law is severable where it conflicts with such provincial law without affecting the remainder of this warranty's terms.

THIS LIMITED WARRANTY DOES NOT COVER:

- Service trips to deliver, pick up, install, clean, or to correct wiring or unauthorized repairs.
- Service trips to educate how to assemble, operate, or maintain the Product.
- Damage or failure of the Product to perform during power failures and interrupted or inadequate electrical service.
- Damage or failure of the Product resulting from operating the Product in a corrosive atmosphere or contrary to the Product owner's manual.
- Damage or failure of the Product caused by accidents, pests and vermin, lightning, wind, fire, floods, acts of nature, or any other causes beyond the control of LG.
- Damage or failure of the Product caused by unauthorized modification or alteration, or if the Product is used for other than the intended purpose.
- Damage or failure of the Product caused by incorrect electrical current or voltage.
- Damage or failure of the Product caused by transportation, storage, and/or handling, including scratches, dents, chips, and/or other damage to the finish of the Product, unless such damage is reported within one (1) week of delivery.
- Damage or missing items to any display, open box, or discounted Product.
- Refurbished Product or any Product sold "As Is", "Where Is", "With all Faults", or similar disclaimer.
- Products with original serial numbers that have been removed, altered, or cannot be readily determined.
- Increases in utility costs and additional utility expenses.
- Any noises associated with normal operation.
- Products used for other than normal and proper household use (e.g., commercial or industrial use, offices, and recreational facilities or vehicles) or contrary to the Product owner's manual.
- Costs associated with removal and reinstallation of the Product for repairs.
- Replacement of batteries, filters, or any consumable parts.
- The removal and reinstallation of the Product if it is installed in an inaccessible location or is not installed in accordance with the Product owner's manual.
- Damage or failure of the Product resulting from misuse, abuse, improper installation, repair, or maintenance. Improper repair includes the use of parts not authorized by LG. Improper installation or maintenance includes installation or maintenance contrary to the Product owner's manual.
- Damage or failure of the Product caused by the use of parts, components, accessories, consumable cleaning products, detergents, chemicals, or any other products or services that are not authorized by LG.

All costs and expenses associated with the above excluded circumstances, listed under the heading, This Limited Warranty Does Not Cover, shall be borne by the consumer.

TO OBTAIN WARRANTY SERVICE AND ADDITIONAL INFORMATION, PLEASE CALL OR VISIT OUR WEBSITE: Call 1-888-542-2623 (7 A.M. to 12 A.M., 365 days a year) and select the appropriate option from the menu,

or visit our website at http://www.lg.com

PROCEDURE FOR RESOLVING DISPUTES:

EXCEPT WHERE PROHIBITED AT LAW (INCLUDING WITH RESPECT TO QUÉBEC, BRITISH COLUMBIA AND ONTARIO CONSUMERS), ALL DISPUTES BETWEEN YOU AND LG ARISING OUT OF OR RELATING IN ANY WAY TO THIS LIMITED WARRANTY OR THE PRODUCT SHALL BE RESOLVED EXCLUSIVELY THROUGH BINDING ARBITRATION, AND NOT IN A COURT OF GENERAL JURISDICTION. EXCEPT WHERE PROHIBITED AT LAW (INCLUDING WITH RESPECT TO QUÉBEC, BRITISH COLUMBIA AND ONTARIO CONSUMERS), YOU AND LG BOTH IRREVOCABLY AGREE TO WAIVE THE RIGHT TO A JURY TRIAL AND TO BRING OR PARTICIPATE IN A CLASS ACTION.

Definitions. For the purposes of this section, references to "LG" mean LG Electronics Canada, Inc., its parents, subsidiaries and affiliates, and each of their officers, directors, employees, agents, beneficiaries, predecessors in interest, successors, assigns and suppliers; references to "dispute" or "claim" shall include any dispute, claim or controversy of any kind whatsoever (whether based in contract, tort, statute, regulation, ordinance, fraud, misrepresentation or any other legal or equitable theory) arising out of or relating in any way to the sale, condition or performance of the product or this Limited Warranty.

Notice of Dispute. In the event you intend to commence an arbitration proceeding, you must first notify LG in writing at least 30 days in advance of initiating the arbitration by sending a letter to LGECI Legal Team at 20 Norelco Drive, North York, Ontario, Canada M9L 2X6 (the "Notice of Dispute"). You and LG agree to engage in good faith discussions in an attempt to amicably resolve your claim. The notice must provide your name, address, and telephone number; identify the product that is the subject of the claim; and describe the nature of the claim and the relief being sought. If you and LG are unable to resolve the dispute within 30 days of LG's receipt of the Notice of Dispute, the dispute shall be resolved by binding arbitration in accordance with the procedure set out herein. You and LG both agree that, during the arbitration proceeding, the terms (including any amount) of any settlement offer made by either you or LG will not be disclosed to the arbitrator until the arbitrator determines the dispute.

Agreement to Binding Arbitration and Class Action Waiver. Upon failure to resolve the dispute during the 30 day period after LG's receipt of the Notice of Dispute, you and LG agree to resolve any claims between you and LG only by binding arbitration on an individual basis, unless you opt out as provided below, or you reside in a jurisdiction that prevents full application of this clause in the circumstances of the claims at issue (in which case if you are a consumer, this clause will only apply if you expressly agree to the arbitration). To the extent permitted by applicable law, any dispute between you and LG shall not be combined or consolidated with a dispute involving any other person's or entity's product or claim. More specifically, without limitation of the foregoing, except to the extent such a prohibition is not permitted at law, any dispute between you and LG shall not under

any circumstances proceed as part of a class or representative action. Instead of arbitration, either party may bring an individual action in small claims court, but that small claims court action may not be brought on a class or representative basis except to the extent this prohibition is not permitted at law in your province or territory of jurisdiction as it relates to the claims at issue between you and LG. This does not apply to consumers in Ontario, British Columbia and Québec. In accordance with provincial legislation, the consumer and LG may agree to resolve the dispute using any procedure available, including commencing the action before the competent courts of those provinces.

Arbitration Rules and Procedures. To begin arbitration of a claim, either you or LG must make a written demand for arbitration. The arbitration will be private and confidential, and conducted on a simplified and expedited basis before a single arbitrator chosen by the parties under the provincial or territorial commercial arbitration law and rules of the province or territory of your residence. You must also send a copy of your written demand to LG at LG Electronics, Canada, Inc., Attn: Legal Department- Arbitration, 20 Norelco Drive, North York, Ontario M9L 2X6. This arbitration provision is governed by your applicable provincial or territorial commercial arbitration legislation. For consumers in Ontario, British Columbia and Québec, the applicable arbitration legislation only applies if consumers agree to submit the dispute to arbitration. Judgment may be entered on the arbitrator's award in any court of competent jurisdiction. All issues are for the arbitrator to decide, except that, issues relating to the scope and enforceability of the arbitration provision and to the arbitrability of the dispute are for the court to decide. The arbitrator is bound by the terms of this provision.

Governing Law. The law of the province or territory of your purchase shall govern this Limited Warranty and any disputes between you and LG except to the extent that such law is preempted by or inconsistent with applicable federal or provincial/territorial law. Should arbitration not be permitted for any claim, action, dispute or controversy between you and LG, you and LG attorn to the exclusive jurisdiction of the courts of the province or territory of your purchase for the resolution of the claim, action, dispute or controversy between you and LG.

Fees/Costs. You do not need to pay any fee to begin an arbitration. Upon receipt of your written demand for arbitration, LG will promptly pay all arbitration filing fees unless you seek more than $25,000 in damages, in which case the payment of these fees will be governed by the applicable arbitration rules. Except as otherwise provided for herein, LG will pay all filing, administration and arbitrator fees for any arbitration initiated in accordance with the applicable arbitration rules and this arbitration provision. If you prevail in the arbitration, LG will pay your attorneys' fees and expenses as long as they are reasonable, by considering factors including, but not limited to, the purchase amount and claim amount. Notwithstanding the foregoing, if applicable law allows for an award of reasonable attorneys' fees and expenses, an arbitrator can award them to the same extent that a court would. If the arbitrator finds either the substance of your claim or the relief sought in the demand is frivolous or brought for an improper purpose (as measured by the applicable laws), then the payment of all arbitration fees will be governed by the applicable arbitration rules. In such a situation, you agree to reimburse LG for all monies previously disbursed by it that are otherwise your obligation to pay under the applicable arbitration rules. Except as otherwise provided for, LG waives any rights it may have to seek attorneys' fees and expenses from you if LG prevails in the arbitration.

Hearings and Location. If your claim is for $25,000 or less, you may choose to have the arbitration conducted solely (1) on the basis of documents submitted to the arbitrator, (2) through a telephonic hearing, or (3) by an in-person hearing as established by the applicable arbitration rules. If your claim exceeds $25,000, the right to a hearing will be determined by the applicable arbitration rules. Any in-person arbitration hearings will be held at the nearest, most mutually-convenient arbitration location available within the province or territory in which you reside unless you and LG both agree to another location or agree to a telephonic arbitration.

Severability and Waiver. If any portion of this Limited Warranty (including these arbitration procedures) is unenforceable, the remaining provisions will continue in full force and effect to the maximum extent permitted by applicable law. Should LG fail to enforce strict performance of any provision of this Limited Warranty (including these arbitration procedures), it does not mean that LG intends to waive or has waived any provision or part of this Limited Warranty.

Opt Out. The arbitration provision requires you and LG to resolve disputes by binding arbitration instead of court, unless the laws of your province or territory do not permit that, or, in other jurisdictions, if you choose to opt out. The arbitration provision does not apply to consumers in Ontario, British Columbia and Québec.

For individuals that fall within the binding arbitration provisions, you may opt out of this dispute resolution procedure. If you opt out, neither you nor LG can require the other to participate in an arbitration proceeding. To opt out, you must send notice to LG no later than 30 calendar days from the date of the first consumer purchaser's purchase of the product by either (i) sending an e-mail to optout@lge.com, with the subject line: "Arbitration Opt Out;" or (ii) calling 1-800-980-2973. You must include in the opt out e-mail or provide by telephone: (a) your name and address; (b) the date on which the product was purchased; (c) the product model name or model number; and (d) the serial number (the serial number can be found (i) on the product; or (ii) online by accessing https://www.lg.com/ca_en/findmodel_serial/).

In the event that you "Opt Out", the law of the province or territory of your residence shall govern this Limited Warranty and any disputes between you and LG except to the extent that such law is preempted by or inconsistent with applicable federal or provincial/territorial law. Should arbitration not be permitted for any claim, action, dispute or controversy between you and LG, you and LG agree to attorn to the exclusive jurisdiction of the courts of the province or territory of your residence for the resolution of the claim, action, dispute or controversy between you and LG.

You may only opt out of the dispute resolution procedure in the manner described above (that is, by e-mail or telephone); no other form of notice will be effective to opt out of this dispute resolution procedure. Opting out of this dispute resolution procedure will not affect the coverage of the Limited Warranty in any way, and you will continue to enjoy the full benefits of the Limited Warranty. If you keep this product and do not opt out, then you accept all terms and conditions of the arbitration provision described above.

Conflict of Terms. In the event of a conflict or inconsistency between the terms of this Limited Warranty and the End User License Agreement ("EULA") in regards to dispute resolution, the terms

of this Limited Warranty shall control and govern the rights and obligations of the parties and shall take precedence over the EULA.

LG Customer Information Center
For inquiries or comments,
visit www.lg.com or call:
1-888-542-2623 CANADA
Register your product Online!
www.lg.com

Trademarks and Licenses

Wi-Fi



Wi-Fi® is a registered trademark of Wi-Fi Alliance®.

Bluetooth®



The Bluetooth® word mark and logos are registered trademarks owned by Bluetooth SIG, Inc. and any use of such marks by Lumi United Technology Co., Ltd is under license. Other trademarks and trade names are those of their respective owners.

Open Source Software Notice Information

To obtain the source code that is contained in this product, under GPL, LGPL, MPL, and other open source licenses that have the obligation to disclose source code, and to access all referred license terms, copyright notices and other relevant documents, please visit **https://opensource.lge.com.**

LG Electronics will also provide open source code to you for a charge covering the cost of performing such distribution upon email request to **opensource@lge.com.**

This offer is valid to anyone in receipt of this information for a period of three years after our last shipment of this product.