Job Name/Location: **Tag No.:**

Date:

For: ☐ File ☐ Resubmit ☐ Approval ☐ Other_____

PO No.:

Architect: **GC:**

Engr: **Mech:**

Rep:
(Company) (Project Manager)

ZRNU123NAAA

R32 Multi V™ Multi-Position Air Handling Unit

12,000 Btu/h Indoor Unit

Performance:

Total Cooling Capacity (Btu/h)[1]	12,000
Heating Capacity (Btu/h)[1]	13.500
Max Power Input (W)[2]	228
L/M/H Power Input at Factory Default (W)	38 / 56 / 91

Rated capacity is certified under the latest AHRI Standard 1230-2023. Ratings are subject to change without notice. Current and past certified ratings are available at www.ahridirectory.org.

Electrical:

Power Supply (V/Hz/Ø)	208-230/60/1
Rated Amps	2.8

Piping:

Refrigerant:

Liquid Line (in., O.D.)	1/4 braze
Vapor Line (in., O.D.)	3/8 braze

Condensate:

Condensate Drain (in., I.D.)	1
Gravity Drain Plugged (in, OD)	1 (3/4 MPT)

Controls Features:

- Auto changeover (Heat Recovery only)
- Auto operation
- Auto restart
- Auto fan
- Dual thermistor control
- Wi-Fi compatible
- Weekly schedule
- Dual setpoint control
- Multiple auxiliary heater applications
- Filter life display
- External on/off control
- R32 leak detection sensor
- Fan speed control
- Group control
- Hot start
- Self diagnostics
- Timer (on/off)
- Child lock

Standard Features:

- Access Panel for Field Supplied Air Filter - 16 x 20 x 1

Optional Accessories:

☐ Auxiliary Heater Kit[3] - PRARH1
☐ Wi-Fi Module - PWFMDD200
☐ Downflow Conversion Kit - PNDFA0
☐ Electric Heat Kits - ANEHxx3Cx[4]

Controller Options:

☐ MultiSITE™ CRC2* Controllers
☐ Simple Remote Controllers
☐ Standard III Remote Controllers
☐ Deluxe Remote Controllers
☐ Remote Temperature Button Sensors
☐ Dry Contacts

Unit Data:

Refrigerant Type	R32
Refrigerant Control	EEV
Sound Pressure[5] dB(A) (H/M/L)	34 / 31 / 28
Sound Power[6] dB(A) (H)	54 / 52 / 50
Filter Type	Washable
MERV	N/A
Filter Quantity	1
Filter Dimensions[7] (in)	16 x 20 x 1
Unit Net Weight (lbs.)	116
Unit Shipping Weight (lbs.)	129

Fan:

Fan Type / Quantity	Sirocco / 1
Motor/Drive	Brushless Digitally Controlled/Direct
Motor Quantity	1
Factory Set External Static Pressure (ESP)[8] (in wg)	0.3
Factory Set Air Flow Rate H/M/L (CFM)	500 / 460 / 420
Minimum ESP (in wg)[9]	0.1
Maximum ESP (in wg)[9]	1.0

Notes:

1. See Engineering Manual for sensible and latent capacities.
2. Maximum power input is rated at maximum setting value.
3. If a Third-Party Dry Contact and an LG internal heater or an LG Auxiliary Heater Kit is installed, supplemental heat capability cannot be controlled by the Third-Party Thermostat.
4. Refer to the Engineering Manual for available auxiliary heater capacities.
5. Sound Pressure levels are tested in an anechoic chamber under ISO Standard 3745.
6. Sound Power levels are tested in a reverberation chamber under ISO Standard 3741.
7. Actual filter sizes may vary.
8. At factory fan speed setting.
9. Maximum static pressure may result in reduced airflow (CFM).
10. Communication cable between (main) outdoor unit to indoor units/heat recovery units to be 18 AWG, 2-conductor, twisted, stranded, shielded. Ensure the communication cable shield is properly grounded to the (main) outdoor unit chassis only. ⃠ DO NOT ground the outdoor unit to indoor units / heat recovery units communication cable at any other point. Wiring must comply with all applicable local and national codes.
11. Power wiring is field provided, and must comply with the applicable local and national codes.
12. This unit comes with a dry nitrogen charge.
13. All capacities are net with a combination ratio between 95 – 105%.
14. Must follow installation instructions in the applicable LG installation manual.

Intertek

For a complete list of available accessories, contact your LG representative.
For continual product development, LG reserves the right to change specifications without notice.
© LG Electronics U.S.A., Inc., Englewood Cliffs, NJ. All rights reserved. "LG Life's Good" is a registered trademark of LG Corp. /www.lghvac.com

Job Name/Location: _____

ZRNU123NAAA

R32 Multi V™ Multi-Position Air Handling Unit

12,000 Btu/h Indoor Unit

Tag No.: _____

Date: _____

PO No.: _____

Factory Configurations

Vertical Upflow

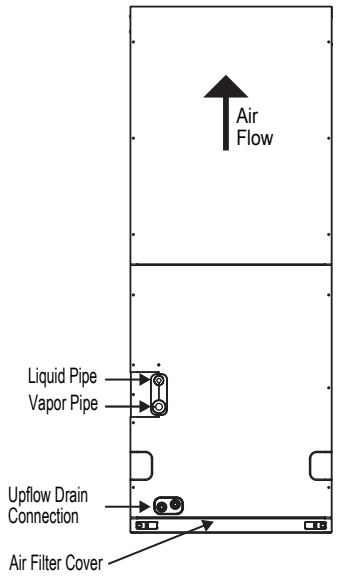

Field Configurations

Vertical Downflow

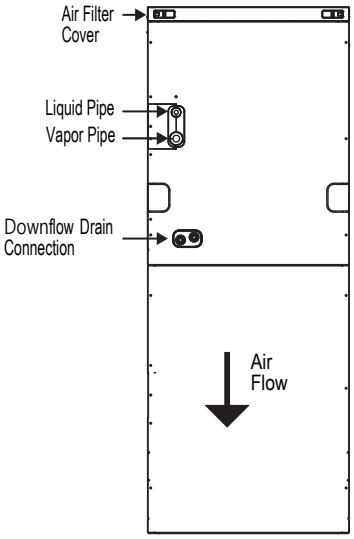

Requires vertical downflow kit

Horizontal Left

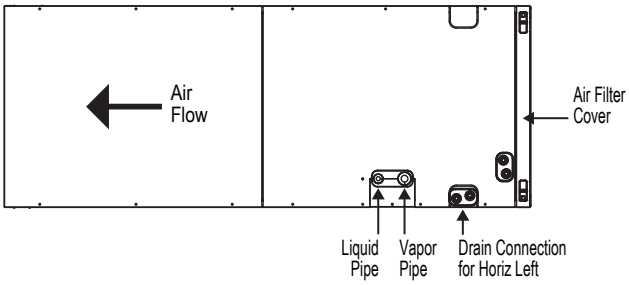

Horizontal Right

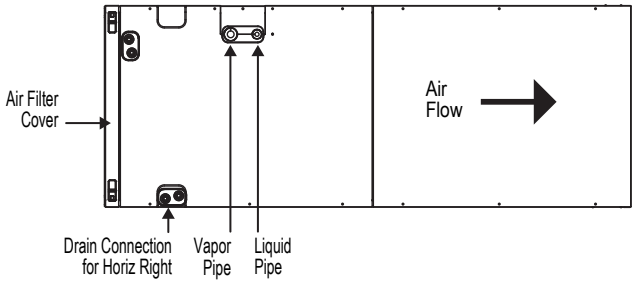

For continual product development, LG reserves the right to change specifications without notice.
© LG Electronics U.S.A., Inc., Englewood Cliffs, NJ. All rights reserved. "LG Life's Good" is a registered trademark of LG Corp. /www.lghvac.com

Job Name/Location: _____

ZRNU123NAAA

R32 Multi V™ Multi-Position Air Handling Unit

12,000 Btu/h Indoor Unit

Tag No.: _____

Date: _____

PO No.: _____

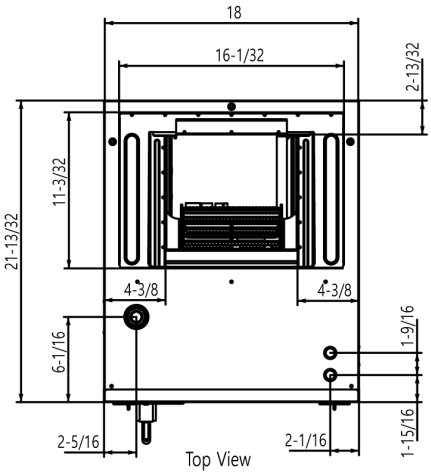

Top View

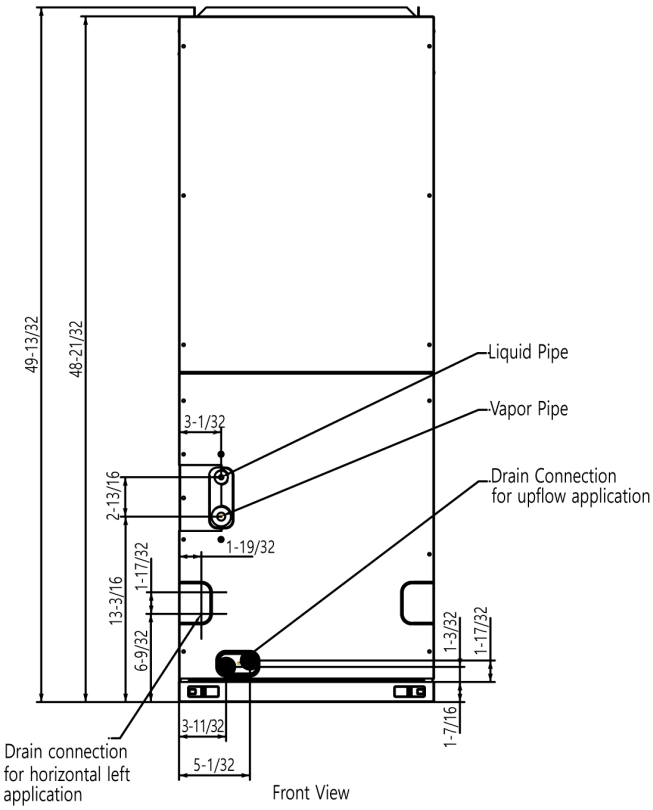

Front View

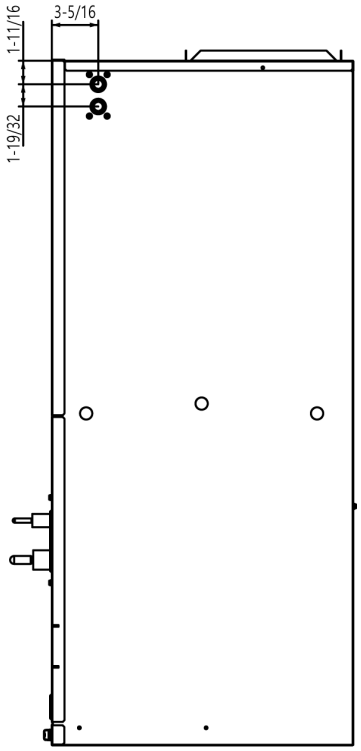

Side View

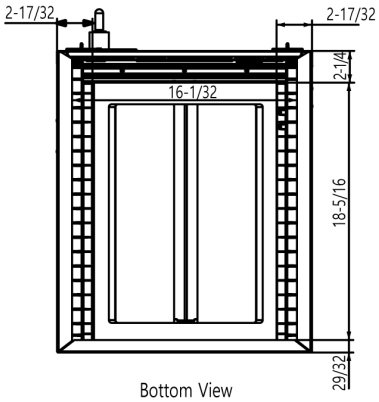

Bottom View

For continual product development, LG reserves the right to change specifications without notice.
© LG Electronics U.S.A., Inc., Englewood Cliffs, NJ. All rights reserved. "LG Life's Good" is a registered trademark of LG Corp. /www.lghvac.com