MultiSITE™ CRC2 Series Controllers

INSTALLATION MANUAL

PREMTBVC2 – MultiSITE™ CRC2

PREMTBVC3 – MultiSITE™ CRC2+

PREMTBVC4 – MultiSITE™ CRC2+Z with Zigbee® Onboard

PROPRIETARY DATA NOTICE

This document, as well as all reports, illustrations, data, information, and other materials are the property of LG Electronics U.S.A., Inc., and are disclosed by LG Electronics U.S.A., Inc., only in confidence.

Do not throw away, destroy, or lose this manual.

Please read carefully and store in a safe place for future reference.
Content familiarity required for proper installation and operation.

The instructions included in this manual must be followed to prevent product malfunction, property damage, injury, or death to the user or other people. Incorrect operation due to ignoring any instructions will cause harm or damage. A summary of safety precautions begins on page 4.

For more technical materials such as submittals, engineering databooks, and catalogs, visit www.lghvac.com.

IM_CRC2_Series_Controllers_11_24

For continual product development, LG Electronics U.S.A., Inc., reserves the right to change specifications without notice.

©LG Electronics U.S.A., Inc.

This document, as well as all reports, illustrations, data, information, and other materials are the property of LG Electronics U.S.A., Inc.

TABLE OF CONTENTS

Proprietary Data Notice 2

Safety Instructions 4

Table of Symbols 4

Introduction 7

Controller Overview 8

Home Screen *8*

Selecting Installation Location *9*

Controller Installation 9

Selecting Installation Location – continued *10*

Installing the Controller *11*

Controller Setup 14

Setpoint Adjustment *15*

Accessories Installation 17

ZigBee Pro and Wi-Fi Wireless Modules *17*

Ceiling Motion Sensor (Old Model - ZVRCZCOC1) *19*

Wall Mounted Motion Sensor *22*

Door/Window Sensor (Old Model - ZVRCZDWS1) *25*

Door/Window Sensor ZVRCZDWC1 ..... *29*

Ceiling/Wall Motion, Temperature and Humidity Sensor ZVRCZMTH1 ..... *32*

Water Leak Sensor ZVRCZWLS1 ..... *35*

CO_2, Temperature, and Humidity Sensor SEDCO2G5045 / Temperature and Humidity Sensor ZVRCZTRH1 ..... *38*

ZigBee Setup 42

ZigBee Pro Quick Setup *42*

BACnet MS/TP Setup 44

BACnet MS/TP Quick Setup *44*

I/O Configuration 45

Specifications 47

PREMTBVC2, PREMTBVC3, and PREMTBVC4 ..... *47*

Limited Warranty (USA) 50

SAFETY INSTRUCTIONS

The instructions below must be followed to prevent product malfunction, property damage, injury or death to the user or other people. Incorrect operation due to ignoring any instructions will cause harm or damage. The level of seriousness is classified by the symbols below.

TABLE OF SYMBOLS

⚠ **DANGER**	*This symbol indicates an imminently hazardous situation which, if not avoided, will result in death or serious injury.*
⚠ **WARNING**	*This symbol indicates a potentially hazardous situation which, if not avoided, could result in death or serious injury.*
⚠ **CAUTION**	*This symbol indicates a potentially hazardous situation which, if not avoided, may result in minor or moderate injury.*
⚠ **NOTE**	*This symbol indicates situations that may result in equipment or property damage accidents only.*
Note:	*This symbol indicates information related to the current procedure.*
⃠	*This symbol indicates an action that should not be performed.*

⚠ DANGER

⃠ **Risk of electric shock. Disconnect all power before servicing.**

⃠ **Do not touch any exposed wiring, terminals, or other electrical components with tools or exposed skin. Only qualified technicians should install, use or remove this unit.**

Improper installation or use may result in fire, explosion, electric shock, physical injury and/or death.

⃠ **Do not use or store flammable gas or combustibles near the product.**

There is risk of fire, explosion, and physical injury or death.

⚠ WARNING

The information in this manual is intended for use by a trained technician familiar with the U.S. National Electric Code (NEC) who is equipped with the proper tools and test instruments.

Failure to carefully read and follow all instructions in this manual may result in equipment malfunction, property damage, personal injury and/or death.

Due to our policy of continuous product innovation, some specifications may change without notification.
©LG Electronics U.S.A., Inc., Englewood Cliffs, NJ. All rights reserved. “LG” is a registered trademark of LG Corp.

Do not install the MultiSITE Controller unit if it will be exposed to rain or other precipitation.

Do not install the unit in a location exposed to open flame or extreme heat.

Do not touch the unit with wet hands.

There is risk of fire, electric shock, physical injury and/or death.

Replace all control box and panel covers.

If cover panels are not installed securely, dust, water and animals may enter the unit, causing fire, electric shock, and physical injury or death.

Wear protective gloves when handling equipment.

Sharp edges may cause personal injury.

Dispose of any packing materials safely.

- *Packing materials, such as nails and other metal or wooden parts may cause puncture wounds or other injuries.*
- *Tear apart and throw away plastic packaging bags so that children may not play with them and risk suffocation and death.*

Do not change the settings of the protection devices.

If the pressure switch, thermal switch, or other protection device is shorted and forced to operate improperly, or parts other than those specified by LG are used, there is risk of fire, electric shock, explosion, and physical injury and/or death.

If the air conditioner is installed in a small space, take measures to prevent the refrigerant concentration from exceeding safety limits in the event of a refrigerant leak.

Consult the latest edition of ASHRAE Standard 15. If the refrigerant leaks and safety limits are exceeded, it could result in physical injuries or death from oxygen depletion.*

NOTE

MultiSITE Controller is for use with select LG air conditioning systems only.

Do not attempt to use MultiSITE Controller with any other type of system. Refer to the compatible equipment list in this manual.

There is risk of equipment damage or degraded performance

Do not cut, lengthen or shorten the cable between the MultiSITE Controller unit and the indoor unit.

Do not install the MultiSITE Controller unit in a location where the cable cannot be safely and easily connected between the two units.

Do not allow strain on this cable.

There is risk of equipment damage.

**The name "ASHRAE" and the ASHRAE logo are trademarks of the American Society of Heating, Refrigerating, and Air-Conditioning Engineers, Inc.*

LG

Due to our policy of continuous product innovation, some specifications may change without notification.
©LG Electronics U.S.A., Inc., Englewood Cliffs, NJ. All rights reserved. "LG" is a registered trademark of LG Corp.

SAFETY INSTRUCTIONS

Note:

Clean up the site after all procedures are finished, and check that no metal scraps, screws, or bits of wiring have been left inside or surrounding the controller or indoor units.

Provide power to the outdoor unit compressor crankcase heaters at least six (6) hours before operation begins.

Starting operation with a cold compressor sump(s) may result in severe bearing damage to the compressor(s). Keep the power switch on during the operational season.

⃠ **Do not block the indoor unit inlet or outlet.**

Unit may malfunction.

Securely attach the electrical cover to the indoor unit. Non-secured covers can result in fire due to dust or water in the service panel.

⃠ **Do not allow water, dirt, or animals to enter the unit.**

There is risk of unit failure or degraded performance.

⃠ **Do not spill water or other liquid on the inside of the indoor unit, especially on electrical components.**

⃠ **Do not drop the MultiSITE Controller unit into water. If the unit is immersed in water or other liquid, contact your local authorized LG distributor for support.**

There is risk of unit failure or degraded performance.

Electronic controls are static sensitive devices.

Discharge yourself correctly before manipulating and installing the MultiSITE Controller.

The information below is for the PREMTBVC4 model:

This device must be installed to provide a separation distance of at least 8 inches from all persons and must not be located or operating in conjunction with any other antenna or transmitter.

Operation is subject to the following two conditions: (1) this device may not cause interference, and (2) this device must accept any interference, including interference that may cause undesired operation of the device.

A short circuit or wrong wiring may permanently damage Remote Controller or equipment.

Due to our policy of continuous product innovation, some specifications may change without notification.
©LG Electronics U.S.A., Inc., Englewood Cliffs, NJ. All rights reserved. “LG” is a registered trademark of LG Corp.

MultiSITE™ CRC2 Series Controllers

This manual describes how to install the LG MultiSITE™ Commercial Remote Controllers (CRC) 2 and the accessories described below. There are three controller models:

- MultiSITE CRC2 (Model PREMTBVC2) with Humidity and I/O
- MultiSITE CRC2+ (Model PREMTBVC3) with Humidity, Motion, and I/O
- MultiSITE CRC2+Z (Model PREMTBVC4) with Humidity, Motion, Zigbee, and I/O

Typical MultiSITE CRC2 Controller

Compatible Equipment

MultiSITE CRC2 Controllers are compatible with LG Air Conditioning Technologies indoor units (except PTAC units).

⃠ Do not attempt to use a MultiSITE CRC2 controller with any other equipment.

Accessories

These accessories are available for MultiSITE CRC2 controllers:

• ZigBee® Pro wireless card	Model ZVRCZPWC2**
• Door and window switch	Model ZVRCZDWC1
• Wall mounted occupancy sensor	Model ZVRCZWOC1
• Ceiling mounted occupancy/ temperature/humidity sensor	Model ZVRCZMTH1
• Temperature/humidity sensor	Model ZVRCZTRH1
• CO_2 /Temperature/humidity sensor	Model SEDCO2G5045
• Water leak sensor	Model ZVRCZWLS1
• WiFi card	Model VCM8002V504

The ZigBee® Pro wireless card is required for communication between the controller and the other sensor accessories.

**CRC2 uses an updated version of the Zigbee Pro wireless card (ZVRCZPWC2) which should not be confused with the CRC1 which uses the ZVRCZPWC1 card.

Safety

Safety of personnel is the primary concern during all procedures. Read and understand the safety summary at the front of this manual.

*ZigBee is a registered trademark of the ZigBee Alliance.
Due to our policy of continuous product innovation, some specifications may change without notification.
©LG Electronics U.S.A., Inc., Englewood Cliffs, NJ. All rights reserved. "LG" is a registered trademark of LG Corp.

CONTROLLER OVERVIEW

Home Screen

The controller home screen is shown and described below.

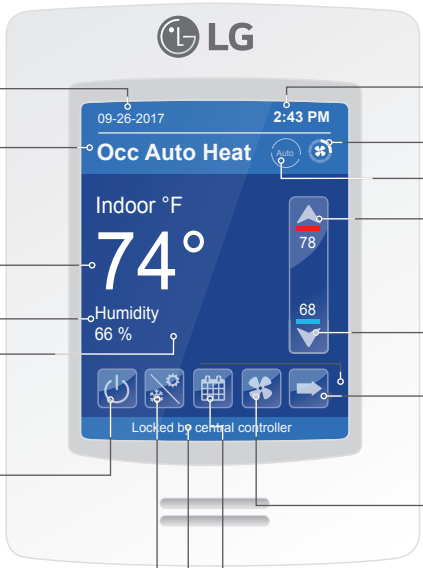

Current Date

Occupancy Status
Occupied (Occ) or Unoccupied (Unocc)

Room Indoor Temperature

Room Indoor Humidity

Room Indoor CO_2

On/Off
Turn the display on or off

Current Time

Current Fan Speed Setting

Operation Mode Status

Up Arrow
Raise Temperature Setpoint

Down Arrow
Lower Tempera-ture Setpoint

More
Provides user with access to less often used functions.

Fan Speed
Set fan to Slow, Low, Low-Med, Medium, Med-High, High, Power, Auto. (Available options depend on IDU model.)

Operation Mode
Set Cool, Heat, Auto Cool, Auto Heat, Fan, Dry modes

Schedule
Set weekly schedule

Note: Pressing and holding the Operation Mode icon takes the user to the Operation Mode page.

Short Network Message

Note: Long-press of the Fan Speed button when in cooling mode triggers Power Cooling mode. If in Power Cooling mode, last airflow segment on top is lit in purple and the text changes from “Fan” to “Power Cool.” This mode lasts for 30 minutes and then reverts back to the previous fan speed.

Note:

Available functions/features may differ based on the connected system.

When any change is made to a parameter, the value is automatically saved in memory when the next parameter is selected or another page is opened.

Arrows auto-increment/decrement at higher speed when holding button for more than 2.5 seconds.

Due to our policy of continuous product innovation, some specifications may change without notification.
©LG Electronics U.S.A., Inc., Englewood Cliffs, NJ. All rights reserved. “LG” is a registered trademark of LG Corp.

Selecting Installation Location

The room temperature sensor is inside the controller, so the installation location is critical to proper system operation. Install the controller in a location away from direct sunlight, high humidity, and direct flow of hot or cold air. Install the controller on a flat, clean wall surface approximately 5 ft above the floor in an area with good circulation and average temperature.

⃠ Do not install the controller where it is exposed to:

- Drafts or dead spots behind doors and in corners
- Hot or cold air from ducts
- Radiant heat from sun or appliances
- Concealed pipes or chimneys
- Uncontrolled areas such as on an outside wall

Refer to Figure 1 for a typical installation location.

Figure 1: Typical Controller Location

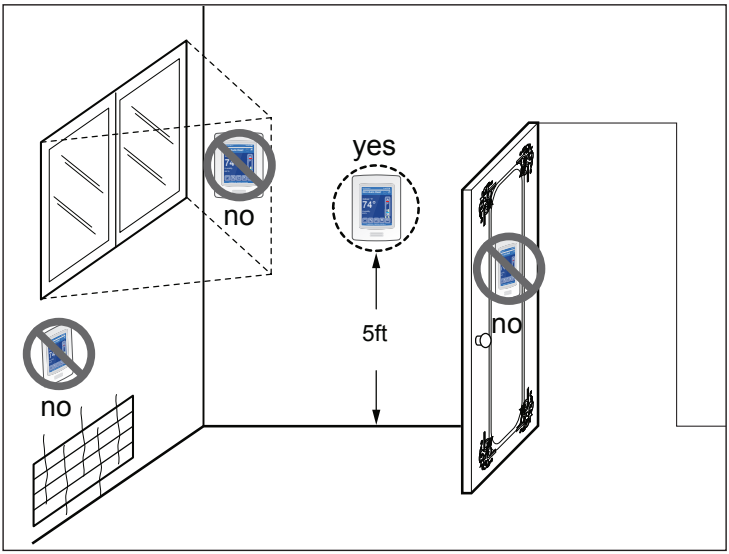

Due to our policy of continuous product innovation, some specifications may change without notification.
©LG Electronics U.S.A., Inc., Englewood Cliffs, NJ. All rights reserved. "LG" is a registered trademark of LG Corp.

Selecting Installation Location – continued

The PREMTBVC3 and PREMTBVC4 contain a passive infrared (PIR) sensor. Refer to Figure 2 for onboard PIR sensor information to consider when selecting the PREMTBVC3 or PREMTBVC4 installation location.

Figure 2: Onboard Motion (PIR) Sensor Installation

Recommended installation height for PIR sensor:

4 - 5 ft. / 1.2-1.5 m

Sensor Ranges

A = 20 ft. / 6.1 m

B = 14 ft. / 4.3 m

C = 11 ft. / 3.4 m

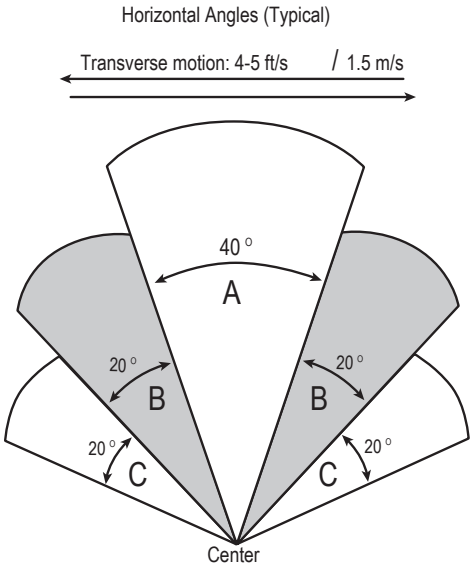

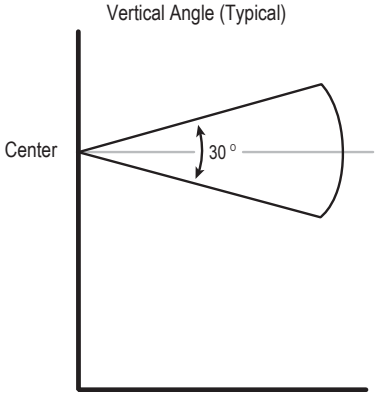

Due to our policy of continuous product innovation, some specifications may change without notification.
©LG Electronics U.S.A., Inc., Englewood Cliffs, NJ. All rights reserved. "LG" is a registered trademark of LG Corp.

Installing the Controller

Follow this procedure to install the controller.

⚠NOTE

- *Electronic controls are static sensitive devices. Discharge yourself properly before manipulating and installing the Remote Controller.*
- *A short circuit or wrong wiring may permanently damage the Remote Controller or the equipment.*

Note:

- *If replacing an existing MultiSITE CRC2 Series Remote Controller, label the wires before removal.*
- *This Remote Controller must be installed to provide a separation distance of at least 8 inches from all persons and must not be collocated or operating in conjunction with any other antenna or transmitter.*
- *If your installation includes wireless accessories, you can install the optional ZigBee Pro wireless module when the controller case is open. Refer to page 17 for Zigbee Pro wireless module installation instructions.*
- *Maximum cable length is 164ft. Do not splice wiring.*
- *Cable Type: 3 conductor, 22 AWG, unshielded, twisted, and stranded.*
- *If the indoor unit does not have screw terminals for field wiring, Extension Cable PZCWRC1 is required. The green Molex connector of this cable connects to the IDU. The white Molex connector of this cable is removed and the wires connected to the Remote Controller as described below.*

1. Remove security screw (if any) on bottom of Remote Controller cover (Figure 3).
2. Read FCC ID and IC label installed in cover before installing any wireless product.
3. Ensure correct side of base faces up.
4. Pull cable 6 inches out from wall.
5. Align base and mark location of two mounting holes on wall (Figure 4).
6. Install anchors in wall.
7. Insert communication cable through center opening of base.

Figure 3: Open Cover

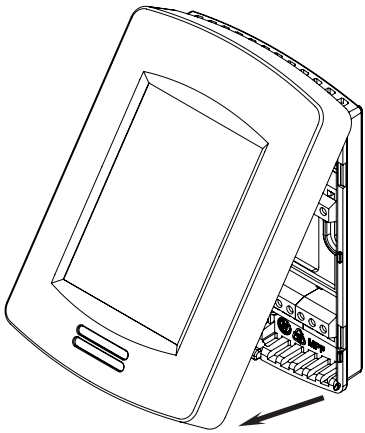

Due to our policy of continuous product innovation, some specifications may change without notification.
©LG Electronics U.S.A., Inc., Englewood Cliffs, NJ. All rights reserved. "LG" is a registered trademark of LG Corp.

Installing the Controller – continued

8. Insert screws in mounting holes on each side of base.
9. If using field-provided communication cable, strip each wire 1/4 inch from end.
10. If using Extension Cable PZCWRC1, carefully cut off the white Molex connector and strip each wire 1/4 inch from end.

Figure 4: Install Base

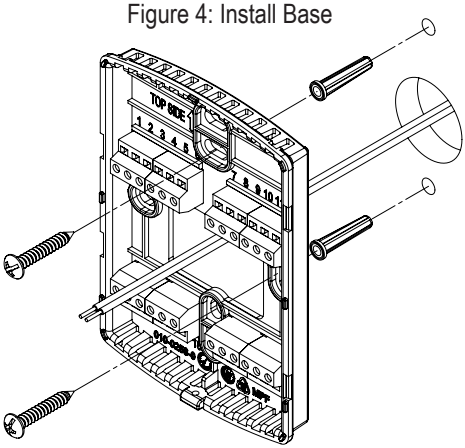

Figure 5: Controller Wiring

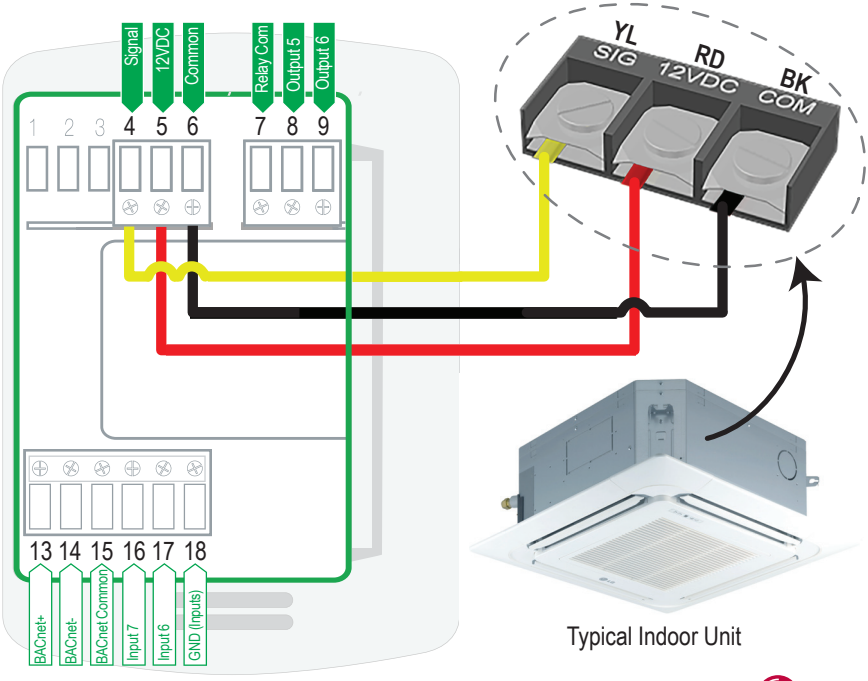

Typical Indoor Unit

Due to our policy of continuous product innovation, some specifications may change without notification.
©LG Electronics U.S.A., Inc., Englewood Cliffs, NJ. All rights reserved. "LG" is a registered trademark of LG Corp.

Installing the Controller – continued

11. Insert each wire in terminal block according to wiring diagram (Figure 5). Table 1 lists the function of all terminal connections.
12. Carefully push excess cable back into hole.
13. Gently align cover to top of base and snap in place from bottom (Figure 6).
14. Install security screw.

Figure 6: Reinstall Cover

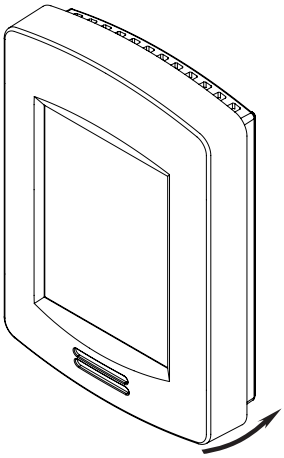

Table 1: Controller Terminal Functions

Terminal	Function
Terminal 1	Not used
Terminal 2	Not used
Terminal 3	Not used
Terminal 4	**Signal Wire**
Terminal 5	**12VDC**
Terminal 6	**Common**
Terminal 7	**Relay Common Outputs 5 and 6**
Terminal 8	**Binary Output 5**
Terminal 9	**Universal Output**
Terminal 13	**BACnet +**
Terminal 14	**BACnet -**
Terminal 15	**BACnet MS/TP Common**
Terminal 16	**Universal Input 7**
Terminal 17	**Universal Input 6**
Terminal 18	**Input/Output Ground**

Due to our policy of continuous product innovation, some specifications may change without notification.
©LG Electronics U.S.A., Inc., Englewood Cliffs, NJ. All rights reserved. "LG" is a registered trademark of LG Corp.

Controller Setup

This section contains a brief overview of MultiSITE controller operation. Refer to the MultiSITE CRC Series User Manual for more information.

Figure 7: Controller Setup

Touch and hold this point for 3 seconds to enter setup mode

If a configuration / installer password is activated to prevent unauthorized access to the configuration menu parameters, a password entry prompt will appear to prevent access to the device configuration components.

Due to our policy of continuous product innovation, some specifications may change without notification.
©LG Electronics U.S.A., Inc., Englewood Cliffs, NJ. All rights reserved. “LG” is a registered trademark of LG Corp.

Setpoint Adjustment

Setpoints can be modified in three different ways when in Auto Mode: Cooling Setpoint change, Heating Setpoint change or Cooling/Heating Setpoint change.

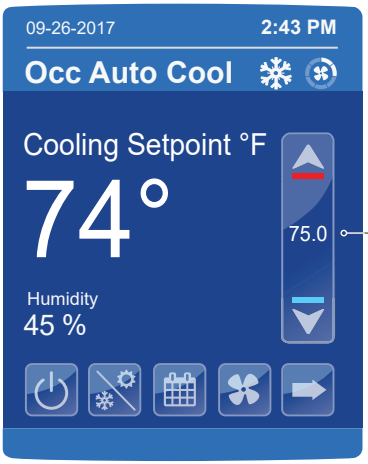

Cooling mode or cooling only sequence of operation

In Cooling mode, the setpoint displayed in the bar is the current occupied cooling setpoint.

During occupied setpoint adjustment, the large digits are temporarily used to display the occupied cooling setpoint while it is adjusted.

Normal temperature display resumes after the setpoint is adjusted and the actual occupied cooling setpoint is displayed in the setpoint bar.

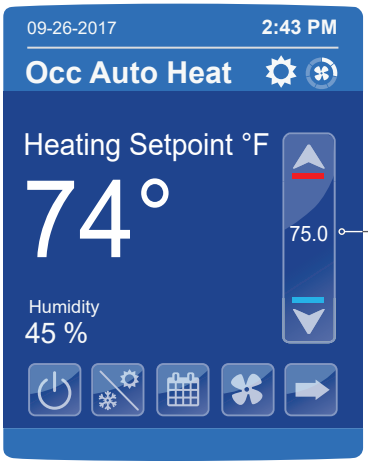

Heating mode or heating only sequence of operation

In Heating mode, the setpoint displayed in the bar is the current occupied heating setpoint.

During occupied setpoint adjustment, the large digits are temporarily used to display the occupied heating setpoint.

Normal temperature display resumes after the setpoint is adjusted and the actual occupied heating setpoint is displayed in the setpoint bar.

Due to our policy of continuous product innovation, some specifications may change without notification.
©LG Electronics U.S.A., Inc., Englewood Cliffs, NJ. All rights reserved. "LG" is a registered trademark of LG Corp.

Setpoint Adjustment – continued

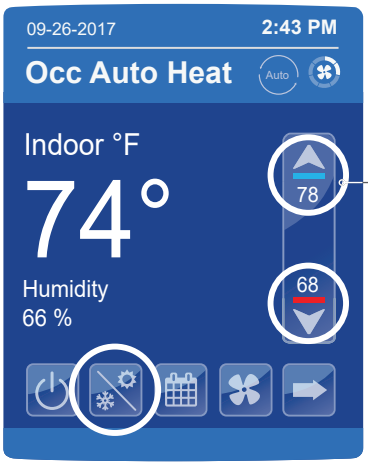

Automatic Heating / Cooling mode

In Automatic mode, the setpoint displayed at the top of the set point bar located directly under the blue line represents the occupied cooling setpoint while the setpoint directly above the red line represents the heating setpoint.

During occupied setpoints adjustment, the large digits are temporarily used to display the occupied “Cooling Setpoint” or occupied “Heating Setpoint.” The actual setpoint is dependent on the last effective demand (heating or cooling).

The CRC setpoint adjustment defaults to cooling adjustment first, regardless of the current mode. To switch to heating setpoint adjustment, tap either the up or down arrow (“Cooling Setpoint” will appear on the screen). Immediately tap the Mode button to switch to heating setpoint adjustment. Each tap of the Mode button will cycle through the available adjustment types; cooling setpoint, heating setpoint and cool/heat setpoint. The cool/heat setpoint adjustment simultaneously raises or lowers both setpoints.

Normal temperature display resumes after the setpoints are adjusted and the actual occupied heating and cooling setpoints are displayed in the setpoint bar.

Due to our policy of continuous product innovation, some specifications may change without notification.
©LG Electronics U.S.A., Inc., Englewood Cliffs, NJ. All rights reserved. “LG” is a registered trademark of LG Corp.

ZigBee Pro and Wi-Fi Wireless Modules

Follow this procedure to install the optional wireless modules (models ZVRCZPWC2 and VCM8002V504). The Zigbee* Pro wireless module is required for the controller to communicate with the optional wireless sensors and the Wi-Fi module is required for BACnet over IP.

1. Remove security screw (if any) on bottom of Remote Controller cover.
2. Open unit by pulling on bottom side of Remote Controller (Figure 9).
3. Carefully remove Remote Controller's Motherboard from casing and turn over.
4. Locate gap in upper-right corner of Remote Controller's motherboard and locate holes to insert the module into the motherboard (Figure 10).
5. Align connector pins on Zigbee Pro or Wi-Fi module with holes on motherboard. Ensure alignment of pins is correct so as to not damage the module.

Figure 8: ZigBee Pro and Wi-Fi Wireless Modules

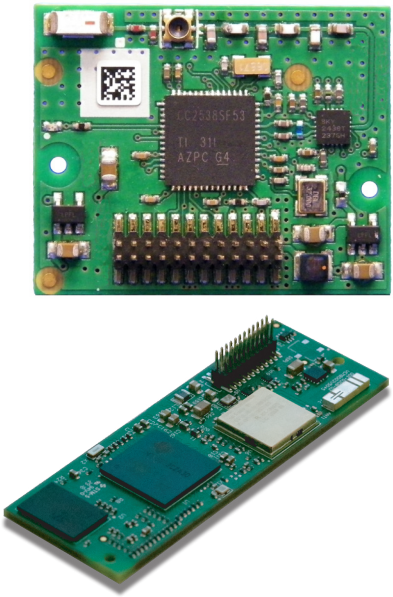

Figure 9: Open Cover

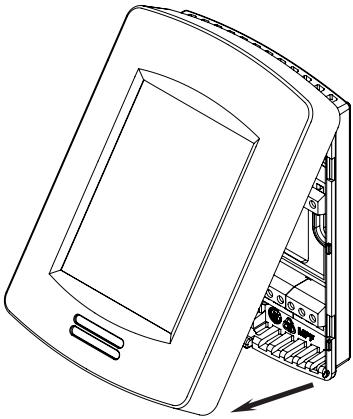

ZigBee is a registered trademark of the ZigBee Alliance.

Due to our policy of continuous product innovation, some specifications may change without notification.
©LG Electronics U.S.A., Inc., Englewood Cliffs, NJ. All rights reserved. "LG" is a registered trademark of LG Corp.

6. Gently press the ZigBee Pro or Wi-Fi module into the Remote Controller's motherboard until it fits snugly in place.
   ⃠ Do not press too hard to avoid damage to ZigBee Pro or Wi-Fi module.
7. Carefully replace Remote Controller's motherboard into casing.
8. Carefully align cover to top of base and snap in place from bottom (Figure 11).
9. Install security screw.

Figure 10: Install ZigBee Pro or Wi-Fi Wireless Module

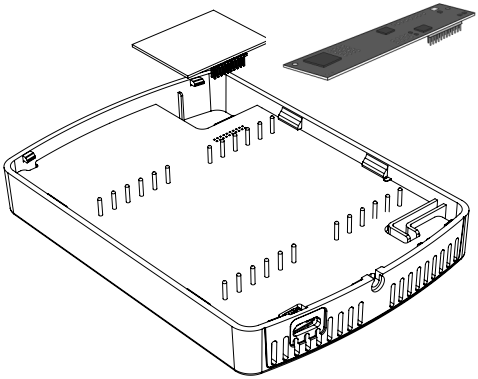

Figure 11: Reinstall Cover

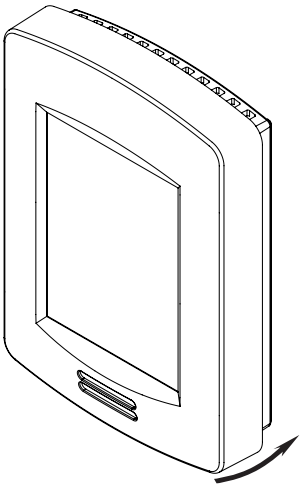

Due to our policy of continuous product innovation, some specifications may change without notification.
©LG Electronics U.S.A., Inc., Englewood Cliffs, NJ. All rights reserved. "LG" is a registered trademark of LG Corp.

Ceiling Motion Sensor (Old Model - ZVRCZCOC1)

Follow this procedure to install the optional wireless ceiling motion sensor.

Figure 12: Ceiling Motion Sensor

Consider the following location constraints before installing a ceiling mounted sensor:

- Do not install on a metal surface.
- Do not install in areas with a direct heat source.
- Do not install near any air discharge grill.
- Do not install in areas exposed to direct sunlight.
- Ensure ceiling surface is flat and clean.
- Install in a dry location away from water, moisture, or rain.

Sensor Placement

Figure 13 shows suggested placement guidelines to optimize detection zones.

Figure 13: Ceiling Sensor Detection Zones

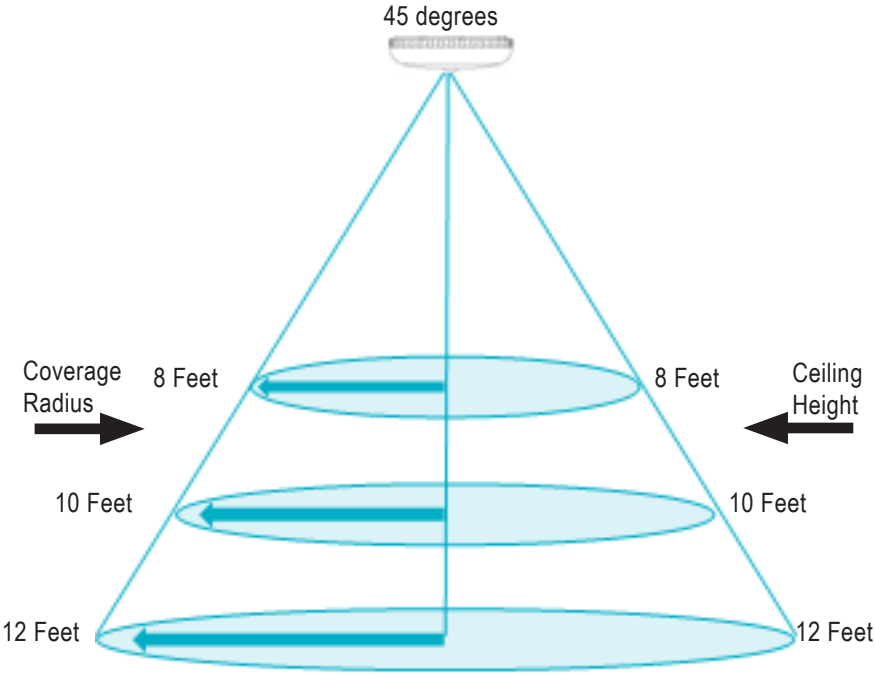

Due to our policy of continuous product innovation, some specifications may change without notification.
©LG Electronics U.S.A., Inc., Englewood Cliffs, NJ. All rights reserved. "LG" is a registered trademark of LG Corp.

Installation Sequence

Complete the following steps (in this order) to correctly install the ceiling mounted motion sensor:

- Install batteries.
- Pair sensor with MultiSITE Controller.
- Verify sensing motion.
- Install sensor to ceiling surface.

Install Batteries

1. Remove mounting plate by rotating housing counter-clockwise (Figure 14).
2. Install two AAA batteries in Sensor Housing (Figure 15). Ensure battery polarity is correct When batteries are first installed, the sensor automatically goes into pairing mode. Refer to “ZigBee Setup” on page 42.
3. Replace mounting plate by rotating housing clockwise.
4. Proceed to Verify Sensing Motion.

Verify Sensing Motion

1. Wait three minutes for sensor to warm up. Sensor requires a three minute warm-up before it reporting any motion detection.
2. Wave hand or object over top area of sensor.
3. Verify LED flashes red on sensor (Figure 16). LED flashing red indicates motion detected.
4. Proceed to Install Ceiling Motion Sensor.

Figure 14: Remove Mounting Plate

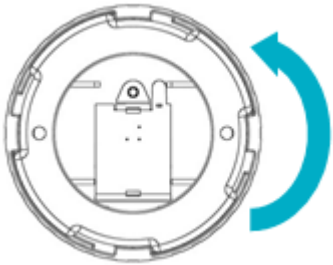

Figure 15: Install Batteries

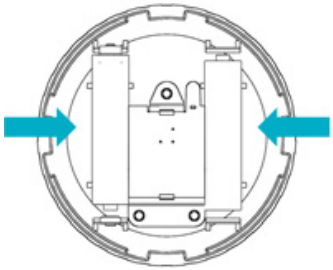

Figure 16: Flashing LED

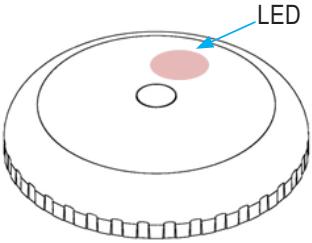

Due to our policy of continuous product innovation, some specifications may change without notification.
©LG Electronics U.S.A., Inc., Englewood Cliffs, NJ. All rights reserved. “LG” is a registered trademark of LG Corp.

Install Ceiling Motion Sensor

1. Consider sensor placement conditions before installing sensor. Refer to “Sensor Placement” on page 19.
2. Secure mounting plate to overhead surface with two screws (Figure 17). Ensure screws are tight and mounting plate does not move easily.
   ⃠ Do not torque screws.
3. Set sensor housing assembly on mounting plate (Figure 17).
4. Rotate sensor housing assembly clockwise until it locks in place. Ensure sensor housing assembly fits snugly to mounting plate.
5. Test the ceiling motion sensor again according to “Verify Sensing Motion” on page 20.

Figure 17: Installing Sensor on Ceiling

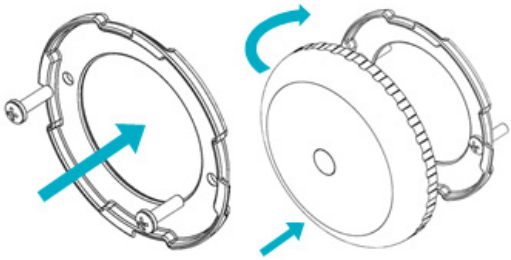

Sensor Functions

Figure 18 shows the location of the function button on the sensor module. Refer to “Table 2: Function Button and LED Indicators” on page 43 for information on using this button and the LED indicator to set up sensor module operation.

Figure 18: Function Button and LED

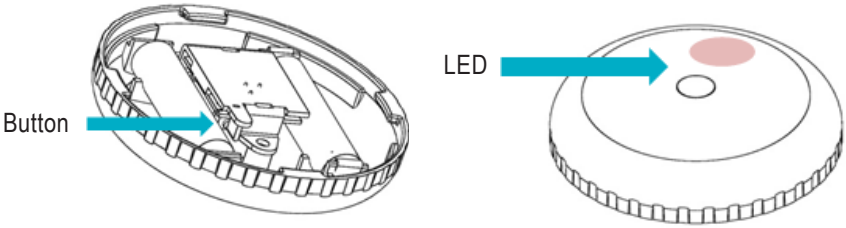

Test Sensor with Controller

Refer to “ZigBee Pro Quick Setup” on page 42 for information on how to test sensor operation.

Due to our policy of continuous product innovation, some specifications may change without notification.
©LG Electronics U.S.A., Inc., Englewood Cliffs, NJ. All rights reserved. “LG” is a registered trademark of LG Corp.

Wall Mounted Motion Sensor

Follow this procedure to install the optional wireless wall mounted motion sensor.

Consider the following location constraints before installing a wall mounted sensor:

- Do not install on a metal surface.
- Do not install in areas with a direct heat source.
- Do not install near any air discharge grill.
- Do not install in areas exposed to direct sunlight.
- Ensure wall surface is flat and clean.
- Install in a dry location away from water, moisture, or rain.

Sensor Placement

Figure 20 shows suggested placement guidelines to optimize detection zones.

Figure 19: Wall Mounted Motion Sensor

Figure 20: Wall Mounted Motion Sensor Coverage Area

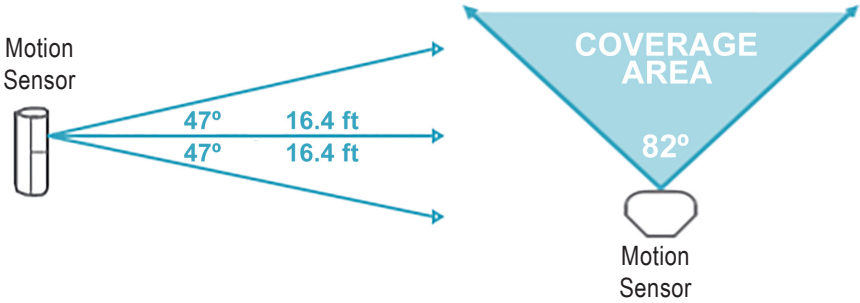

Due to our policy of continuous product innovation, some specifications may change without notification.
©LG Electronics U.S.A., Inc., Englewood Cliffs, NJ. All rights reserved. "LG" is a registered trademark of LG Corp.

Installation Sequence

Complete the following steps (in this order) to correctly install the wall mounted motion sensor:

- Install battery.
- Pair sensor with MultiSITE Controller.
- Remove plastic pull tab.
- Verify sensing motion.
- Install sensor to wall surface.

Install Battery

1. Use a flathead screwdriver to carefully pry cover away from motion sensor (Figure 21).
2. Install one CR2 battery in Sensor Housing (Figure 22). Ensure battery polarity is correct When battery is first installed, the sensor automatically goes into pairing mode. Refer to “ZigBee Setup” on page 42.
3. Replace cover on motion sensor.
4. Proceed to Verify Sensing Motion.

Verify Sensing Motion

1. Wait three minutes for sensor to warm up. Sensor requires a three minute warm-up before it reporting any motion detection.
2. Wave hand or object in front of sensor.
3. Verify LED flashes red on sensor (Figure 16). LED flashing red indicates motion detected.
4. Proceed to Install Wall Mounted Motion Sensor.

Figure 21: Remove Sensor Cover

Figure 22: Install Battery

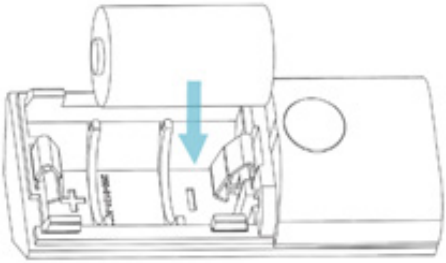

Figure 23: Flashing LED

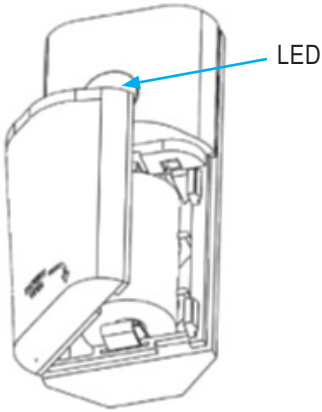

Due to our policy of continuous product innovation, some specifications may change without notification.
©LG Electronics U.S.A., Inc., Englewood Cliffs, NJ. All rights reserved. “LG” is a registered trademark of LG Corp.

Install Wall Mounted Motion Sensor

Install the motion sensor to the desired location. The motion sensor can be installed vertically, horizontally, or upside down on a flat surface or in a corner.

1. Consider sensor placement conditions before installing sensor. Refer to “Sensor Placement” on page 22.
2. Affix two-sided tape to desired installation location (Figure 24).
3. Position motion sensor on two-sided tape and press firmly to secure in place.
4. Test the wall mounted motion sensor again according to “Verify Sensing Motion” on page 23

Figure 24: Wall Mounted Motion Sensor Installation

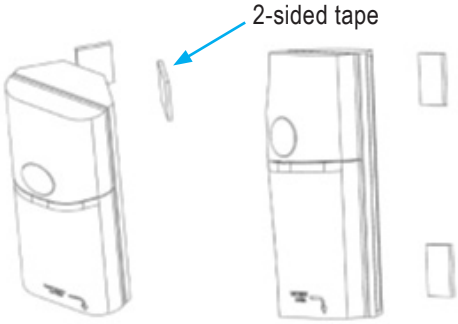

Sensor Functions

Figure 25 shows the location of the function button on the sensor module. Refer to “Table 2: Function Button and LED Indicators” on page 43 for information on using this button and the LED indicator to set up sensor module operation.

Figure 25: Function Button and LED

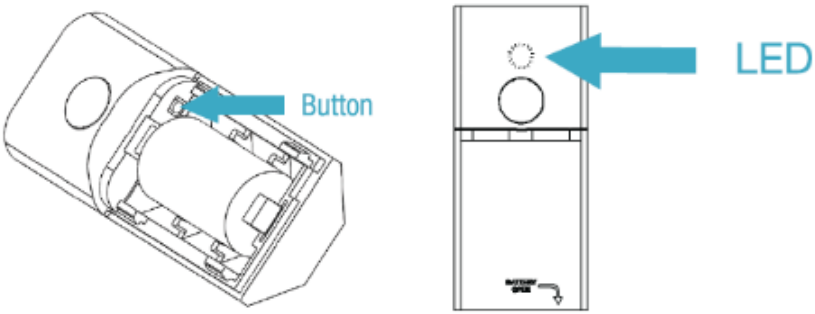

Test Sensor with Controller

Refer to “ZigBee Pro Quick Setup” on page 42 for information on how to test sensor operation.

Due to our policy of continuous product innovation, some specifications may change without notification.
©LG Electronics U.S.A., Inc., Englewood Cliffs, NJ. All rights reserved. “LG” is a registered trademark of LG Corp.

Door/Window Sensor (Old Model - ZVRCZDWS1)

Follow this procedure to install the optional door/window sensor.

Figure 26: Door/Window Sensor

Consider the following location constraints before installing a door/window sensor:

- ⃠ Do not install a on metal surface.
- ⃠ Do not install in areas with a direct heat source.
- ⃠ Do not install near any air discharge grill.
- ⃠ Do not install in areas exposed to direct sunlight.
- Ensure mounting surface is flat and clean.
- Install in a dry location away from water, moisture, or rain.

Sensor Placement

Figure 27 shows suggested placement guidelines to optimize sensor operation. Ensure contact switch and magnet face each other as shown in Figure 27. The contact switch and magnet can be a maximum of 0.75 in apart. If aligned properly, you will hear a ‘click’ when they approach.

Figure 27: Door/Window Sensor Placement

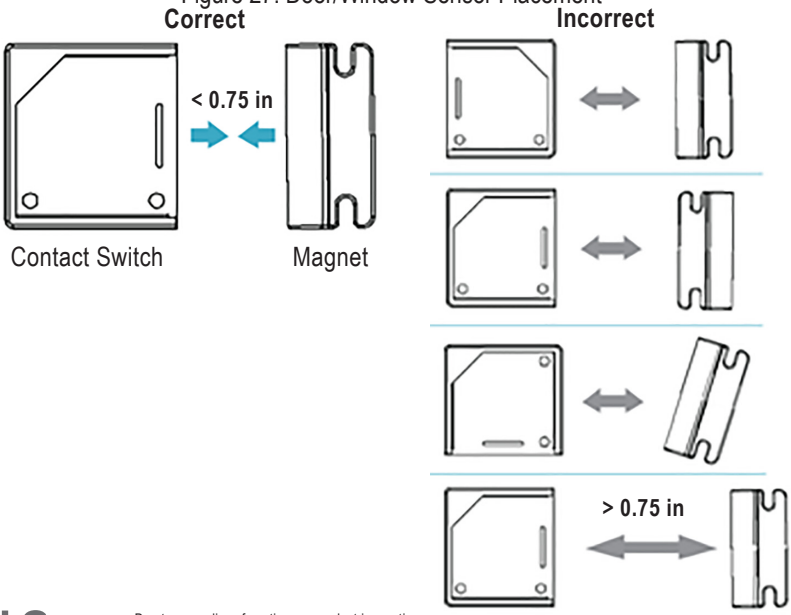

Due to our policy of continuous product innovation, some specifications may change without notification.
©LG Electronics U.S.A., Inc., Englewood Cliffs, NJ. All rights reserved. “LG” is a registered trademark of LG Corp.

Installation Sequence

Complete the following steps (in this order) to correctly install the door/window sensor:

- Install batteries.
- Pair sensor with MultiSITE Controller.
- Remove plastic pull tab.
- Install sensor housing.
- Install magnet.
- Install sensor.

Install Battery

1. Pull tab and slide open housing of door/window sensor to access battery (Figure 28).
2. Install one CR2032 battery in the housing (Figure 29). Ensure battery polarity is correct When battery is first installed, the sensor automatically goes into pairing mode. Refer to “ZigBee Setup” on page 42.
3. If replacing an old battery, use a plastic tool to carefully pry battery out of compartment.
   ⃠ Do not use a metal tool; it may cause a short circuit or cause damage to the sensor.
4. Replace housing cover.

Figure 28: Open Housing

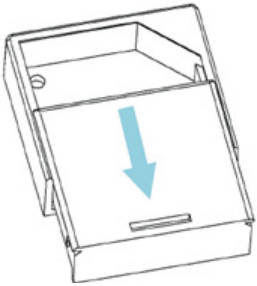

Figure 29: Install Battery

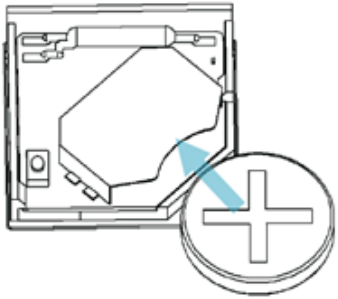

Install Sensor Housing

Use either screws or two sided tape to install the sensor housing. The sensor housing and the magnet must align properly. The sensor and magnet must be within 0.75 inches of each other. Be sure to install the parts in the correct orientation.

To install with tape:

1. Affix 2-sided tape to desired location (Figure 30). Ensure tape is flush with

Due to our policy of continuous product innovation, some specifications may change without notification.
©LG Electronics U.S.A., Inc., Englewood Cliffs, NJ. All rights reserved. “LG” is a registered trademark of LG Corp.

surface and securely affixed to surface.

2. Position sensor housing on two sided tape and press firmly to secure in place.
3. Ensure the sensor is paired. If necessary, refer to "ZigBee Pro Quick Setup" on page 42.
4. Slide the sensor into the housing.

To install with screws:

1. Secure the sensor housing to the desired location with two screws (Figure 31). Ensure screws are tight and sensor does not move easily.
   ⃠ Do not torque screws.
2. Ensure the sensor is paired. If necessary, refer to "ZigBee Pro Quick Setup" on page 42.
3. Slide the sensor into the housing.

Figure 30: Install Sensor with Tape

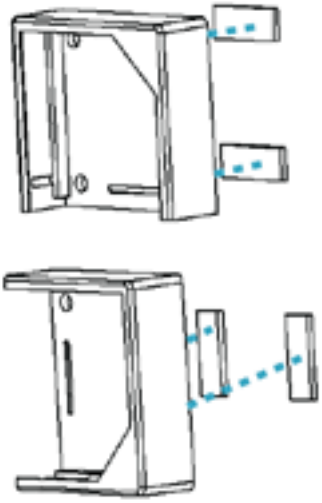

Figure 31: Install Sensor with Screws

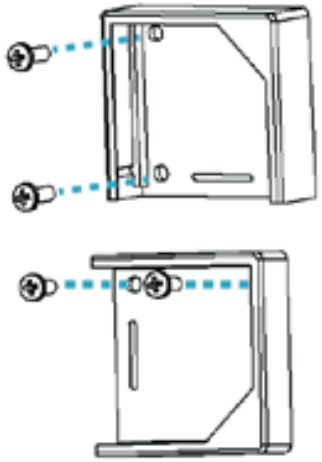

Install Magnet

Use either screws or two sided tape to install the magnet. The sensor housing and the magnet must align properly. The sensor and magnet must be within 0.75 inches of each other. Be sure to install the parts in the correct orientation.

If installing with tape, the magnet's screw tab can be removed by snapping the tab along the scored line (Figure 32). To install with tape:

1. Refer to Figure 27 for relative positioning of sensor and magnet.
2. Affix 2-sided tape to desired location. Ensure tape is flush with surface and securely affixed to surface.
3. Position the magnet on the two sided tape and press firmly to secure in place.

To install with screws:

1. Refer to Figure 27 for relative positioning of sensor and magnet.
2. Secure the magnet to the desired location with two screws. Ensure screws are tight and magnet does not move easily.
   ⃠ Do not torque screws.

Due to our policy of continuous product innovation, some specifications may change without notification.
©LG Electronics U.S.A., Inc., Englewood Cliffs, NJ. All rights reserved. "LG" is a registered trademark of LG Corp.

Sensor Functions

Figure 33 shows the location of the function button on the sensor module. Refer to “Table 2: Function Button and LED Indicators” on page 43 for information on using this button and the LED indicator to set up sensor module operation.

Figure 32: Remove Screw Tab if Desired

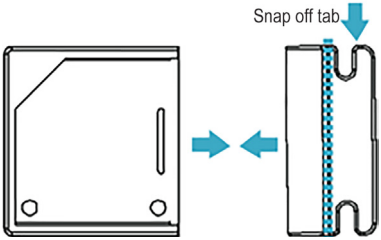

Figure 33: Function Button and LED

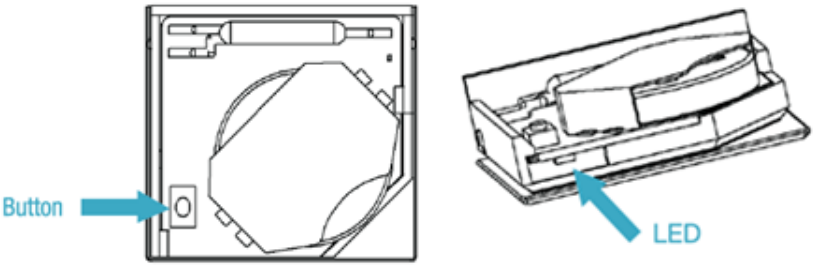

Test Sensor with Controller

Refer to “ZigBee Pro Quick Setup” on page 42 for information on how to test sensor operation.

Due to our policy of continuous product innovation, some specifications may change without notification.
©LG Electronics U.S.A., Inc., Englewood Cliffs, NJ. All rights reserved. “LG” is a registered trademark of LG Corp.

Door/Window Sensor ZVRCZDWC1

Follow this procedure to install the optional door/window sensor.

Figure 34: Door/Window Sensor

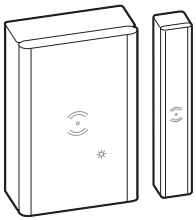

Consider the following location constraints before installing a door/window sensor:

- ⃠ Do not install a on metal surface.
- ⃠ Do not install in areas with a direct heat source.
- ⃠ Do not install near any air discharge grill.
- ⃠ Do not install in areas exposed to direct sunlight.
- Ensure mounting surface is flat and clean.
- Install in a dry location away from water, moisture, or rain.

Sensor Placement

Figure 35 shows suggested placement guidelines to optimize sensor operation. Ensure contact switch and magnet face each other as shown in Figure 35.

Figure 35: Door/Window Sensor Placement

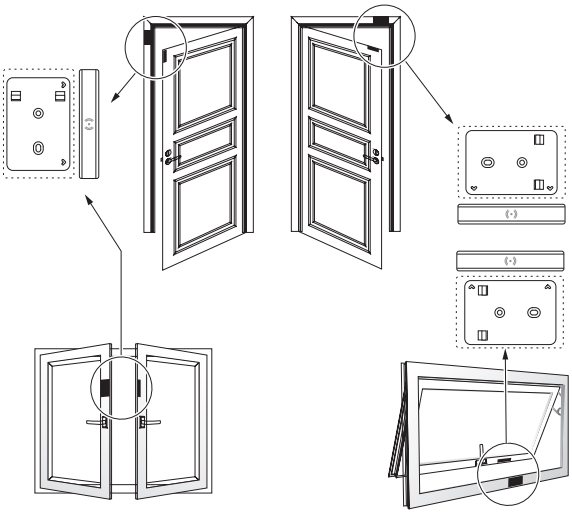

Due to our policy of continuous product innovation, some specifications may change without notification.
©LG Electronics U.S.A., Inc., Englewood Cliffs, NJ. All rights reserved. "LG" is a registered trademark of LG Corp.

Door/Window Sensor Installation

1. Remove the base cover screw and base cover. Pull out the battery isolation strip and then replace the cover and screw.
2. Attach the window/door sensor to the window or door, observing the following:
   - Where possible, install the main (sensor) part base plate on the window/door frame, and the sub (magnet) part on the window/door itself.
   - The sub part must be installed so that it is located on the sensing side of the main part when the window/door is closed
   - The main part base plate has arrow indicators to help with alignment and positioning..
   - Recommended distance from main part to sub part when window/door is closed:

     Wood: <11/16 inch

     Plastic: <11/16 inch

     Metal: <3/8 inch

   - For wood or plastic surfaces, use either the adhesive pads P or the mounting screws. (If using screws, pre-drill a 1/32 in hole.)
   - For metal surfaces, use the adhesive pads only.
3. Attach the main part to the base plate (Figure 36) by inserting the hooks on the base plate into the holes on the main part.

Figure 36: Door/Window Sensor Installation

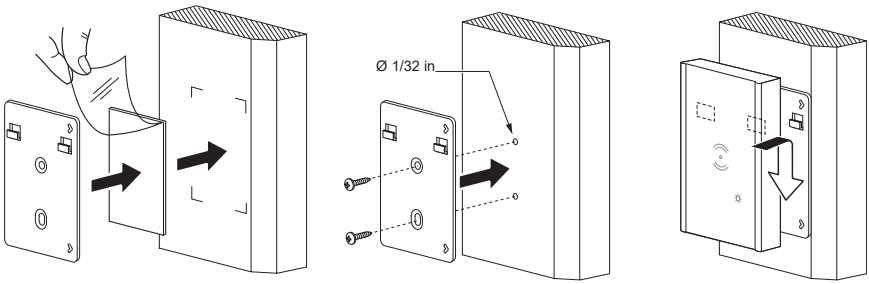

Due to our policy of continuous product innovation, some specifications may change without notification.
©LG Electronics U.S.A., Inc., Englewood Cliffs, NJ. All rights reserved. “LG” is a registered trademark of LG Corp.

Door/Window Sensor Operation

Note: Remove the main part from the base plate to access the function key.

Pairing with a controller

1. Refer to the remote controller user guide to put the remote controller into pairing mode.
2. Short press the function key 3 times within 1 second.
3. The sensor pairs with the controller.

Resetting the sensor

1. Short press the function key 3 times within 1 second.
2. Press and hold the function key until the status LED indicates factory reset mode (approximately 10 seconds):
3. Release the function key.
4. The sensor restarts.

Checking the sensor status

1. Short press the function key 3 times within 1 second.
2. Check the status displayed on the LED indicator:
   - If blinking yellow, sensor is not connected (looking for a controller).
   - If blinking green, sensor is connected to a controller.

Due to our policy of continuous product innovation, some specifications may change without notification.
©LG Electronics U.S.A., Inc., Englewood Cliffs, NJ. All rights reserved. "LG" is a registered trademark of LG Corp.

Ceiling/Wall Motion, Temperature and Humidity Sensor ZVRCZMTH1

Follow this procedure to install the optional ceiling/wall sensor.

Consider the following location constraints before installing a ceiling/wall sensor:

- ⃠ Do not install a on metal surface.
- ⃠ Do not install in areas with a direct heat source.
- ⃠ Do not install near any air discharge grill.
- ⃠ Do not install in areas exposed to direct sunlight.
- Ensure mounting surface is flat and clean.
- Install in a dry location away from water, moisture, or rain.

Sensor Placement

Figure 37 shows suggested placement guidelines to optimize sensor operation.

Figure 37: Ceiling/Wall Sensor Placement

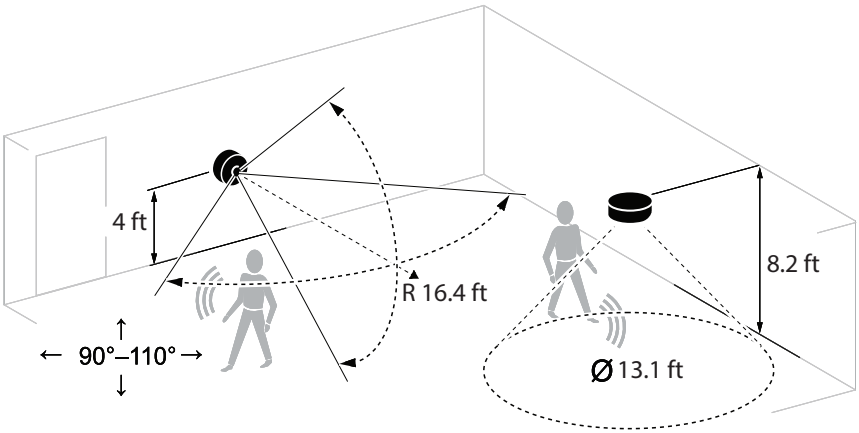

Due to our policy of continuous product innovation, some specifications may change without notification.
©LG Electronics U.S.A., Inc., Englewood Cliffs, NJ. All rights reserved. "LG" is a registered trademark of LG Corp.

Ceiling/Wall Sensor Installation

1. Pull out the battery isolation strip.
2. Attach the sensor to a wall or ceiling, observing the following:
   - Recommended ceiling mount height is 8.2 ft.
   - Recommended wall mount height is 4 ft.
   - For wall mounting, ensure that the base plate is attached to the wall with the TOP arrow up.
   - For wood or plastic surfaces, use either the adhesive pads or the mounting screws. (If using screws, pre-drill a 1/32 in hole.)
   - For metal surfaces, use the adhesive pads only. For ceiling mounting, using screws is recommended.
3. Attach the sensor to the base plate.
   - Insert the hooks on the base plate into the slots on the sensor.
   - Turn the sensor body clockwise to lock the sensor to the base plate.
   - An instruction is printed on the side of the sensor body to help with attachment.
   - For wall mounted sensors the temperature and humidity sensor holes should be at the bottom once the sensor is installed.

Figure 38: Ceiling/Wall Sensor Installation

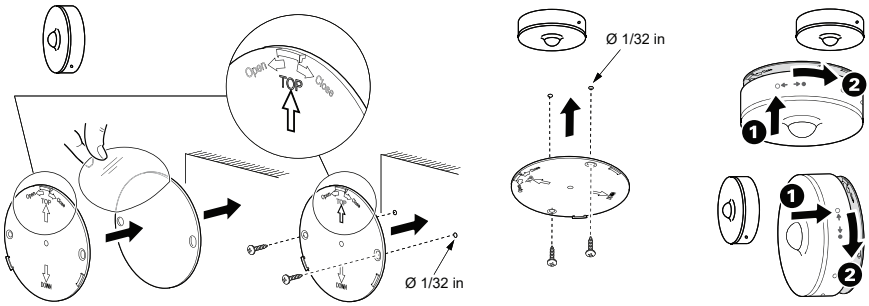

Due to our policy of continuous product innovation, some specifications may change without notification.
©LG Electronics U.S.A., Inc., Englewood Cliffs, NJ. All rights reserved. "LG" is a registered trademark of LG Corp.

Wall/Ceiling Sensor Operation

Note: Remove the main part from the base plate to access the function key.

Pairing with a controller

1. Refer to the remote controller user guide to put the remote controller into pairing mode.
2. Short press the function key 3 times within 1 second.
3. The sensor pairs with the controller.

Resetting the sensor

1. Short press the function key 3 times within 1 second.
2. Press and hold the function key until the status LED indicates factory reset mode (approximately 10 seconds):
3. Release the function key.
4. The sensor restarts.

Checking the sensor status

1. Short press the function key 3 times within 1 second.
2. Check the status displayed on the LED indicator:
   - If blinking yellow, sensor is not connected (looking for a controller).
   - If blinking green, sensor is connected to a controller.

Due to our policy of continuous product innovation, some specifications may change without notification.
©LG Electronics U.S.A., Inc., Englewood Cliffs, NJ. All rights reserved. “LG” is a registered trademark of LG Corp.

Water Leak Sensor ZVRCZWLS1

Follow this procedure to install the optional water leak sensor.

Consider the following location constraints before installing a ceiling/wall sensor:

- ⃠ Do not install a on metal surface.
- ⃠ Do not install in areas with a direct heat source.
- ⃠ Do not install near any air discharge grill.
- ⃠ Do not install in areas exposed to direct sunlight.
- Ensure mounting surface is flat and clean.
- Install in a dry location away from water, moisture, or rain.

Sensor Placement

Figure 39 shows suggested placement guidelines to optimize sensor operation.

Figure 39: Water Leak Sensor Placement

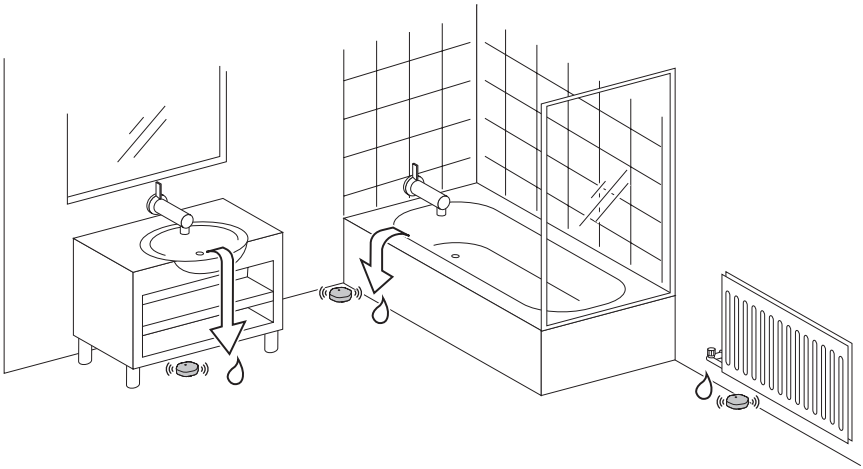

Due to our policy of continuous product innovation, some specifications may change without notification.
©LG Electronics U.S.A., Inc., Englewood Cliffs, NJ. All rights reserved. "LG" is a registered trademark of LG Corp.

Water Leak Sensor Installation

1. Place the sensor on the floor in a location where water leakage will be detected soon after the leak starts. For example:
   - At the side of a bath tub or vanity unit to detect overflow from the tub or sink.
   - Beneath a hot water radiator control tap.
   - Near a water pipe or tap to detect leakage.
2. Ensure that the sensor is placed so that the sensing pads are in contact with the floor.
3. Avoid locations where the sensor may be accidentally kicked or otherwise moved. The best locations are on the floor in corners, or beneath cabinets or other fixtures.

Figure 40: Water Leak Sensor Installation

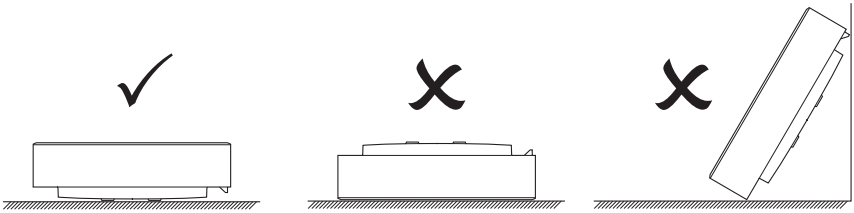

Due to our policy of continuous product innovation, some specifications may change without notification.
©LG Electronics U.S.A., Inc., Englewood Cliffs, NJ. All rights reserved. “LG” is a registered trademark of LG Corp.

Water Leak Sensor Operation

Pairing with a controller

1. Refer to the remote controller user guide to put the remote controller into pairing mode.
2. Short press the function key 3 times within 1 second.
3. The sensor pairs with the controller.

Resetting the sensor

1. Short press the function key 3 times within 1 second.
2. Press and hold the function key until the status LED indicates factory reset mode (approximately 10 seconds):
3. Release the function key.
4. The sensor restarts.

Checking the sensor status

1. Short press the function key 3 times within 1 second.
2. Check the status displayed on the LED indicator:
   - If blinking yellow, sensor is not connected (looking for a controller).
   - If blinking green, sensor is connected to a controller.

Due to our policy of continuous product innovation, some specifications may change without notification.
©LG Electronics U.S.A., Inc., Englewood Cliffs, NJ. All rights reserved. "LG" is a registered trademark of LG Corp.

CO_2, Temperature, and Humidity Sensor SEDCO2G5045 / Temperature and Humidity Sensor ZVRCZTRH1

Follow this procedure to install the optional SEDCO2G5045 and ZVRCZTRH1 sensors.

Consider the following location constraints before installing a ceiling/wall sensor:

- ⃠ Do not install a on metal surface.
- ⃠ Do not install in areas with a direct heat source.
- ⃠ Do not install near any air discharge grill.
- ⃠ Do not install in areas exposed to direct sunlight.
- Ensure mounting surface is flat and clean.
- Install in a dry location away from water, moisture, or rain.

Sensor Installation

The wireless CO2 + TRH / TRH sensors can be secured directly on a wall or flat surface using double-sided adhesive tape or by securing the plastic bracket to the wall and mounting the sensor. Using the screws is the recommended method.

1. Using two screws provided, secure wall bracket to wall (Figure 41).
2. Once bracket is secured, slide sensor on bracket using downward motion.

Figure 41: Wall Bracket Installation

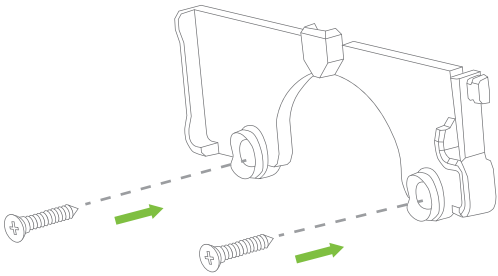

Due to our policy of continuous product innovation, some specifications may change without notification.
©LG Electronics U.S.A., Inc., Englewood Cliffs, NJ. All rights reserved. “LG” is a registered trademark of LG Corp.

It is strongly recommended to attach the sensor to the wall by using the two screws. The adhesive in double-sided tape may not be as long-lasting or as strong to support the sensor throughout its lifetime. Figure 42 shows where to attach the tape.

Figure 42: Double-Sided Tape Installation

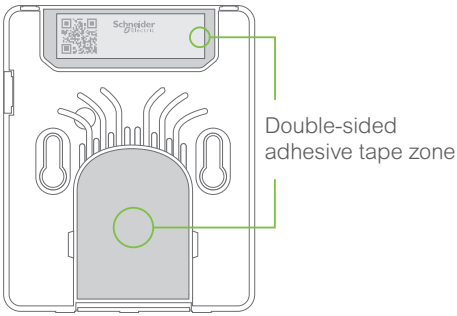

3. Ensure click sound is heard to verify sensor is secured to bracket and ensure side tab of bracket is aligned with opening on side of sensor (Figure 43).

Figure 43: Secure Sensor to Bracket

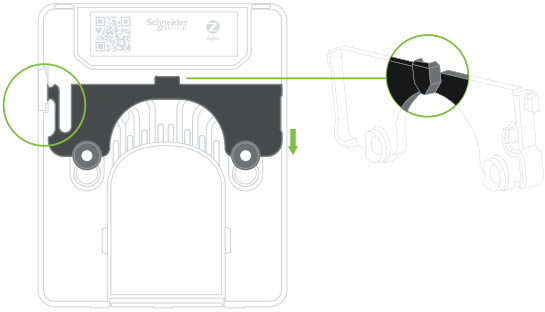

Due to our policy of continuous product innovation, some specifications may change without notification.
©LG Electronics U.S.A., Inc., Englewood Cliffs, NJ. All rights reserved. "LG" is a registered trademark of LG Corp.

CO2, Temperature, and Humidity / Temperature and Humidity Sensor Interface

The sensor is deployed by setting the interface with a push button and a multi-color LED. Both are hidden under the sensor housing and intended for use by a trained installer only (Figure 44).

Figure 44: Sensor Interface

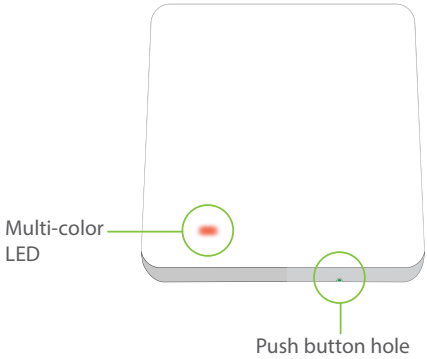

Push Button

The push button can be pressed through a hole from the bottom side of the sensor, with a slim tool . Each recorded button press is signaled by 2 yellow LED flashes.

- Short push

One short push starts the commissioning procedure if the sensor is in the decommissioned (energy saving / hibernation) mode. If the sensor is already commissioned, it will enter “demo mode” for a 5-minute timeout interval.

- Long push

One long push puts the sensor into decommissioned / hibernate mode. The long push is confirmed by one red LED flash roughly 1 second after 2 yellow LED push signaling flashes. After a red LED signal, the button should be released in order to prevent another unintended short push detection.

Multicolor LED

The multicolor LED is hidden under the top plastic cover, positioned on left (Figure 44). In normal state the LED is off in order to conserve battery life. It is only used to signal the following special events: The LED flashes are 1/2 second.

- 2 YELLOW flashes confirm each button push taken into account by the sensor.
- 1 RED flash acknowledges a long push. The decommissioning procedure and a sensor reset will be executed, then the sensor will enter hibernation mode.
- 3 RED flashes signal a commissioning procedure failure. The sensor stays in decommissioned / hibernation mode.

Due to our policy of continuous product innovation, some specifications may change without notification.
©LG Electronics U.S.A., Inc., Englewood Cliffs, NJ. All rights reserved. “LG” is a registered trademark of LG Corp.

- 3 GREEN flashes signal a commissioning procedure success. The sensor will enter demo mode for 5 minutes. This demo mode will automatically timeout after 5 minutes. The sensor then stays in commissioned mode, periodically transmitting the measured values to the receiver.
- 1 GREEN flash acknowledges a valid GP command received by the sensor in demo mode. This feature can be used as a feedback to an installer to confirm that the sensor is still in range during the commissioning (it works only in demo mode). In this case the receiver has to be programmed to send an acknowledgment command to the sensor after the sensor data report frames.

CO2 Autosensor Calibration

The CO_2 module inside the wireless CO_2 + TRH sensor is fully calibrated prior to shipping from the factory. Over time, the measurement offset needs to be calibrated to maintain the long term stability of the sensor. In most applications, this can happen automatically using the built in auto-calibration function. This technique can be used in situations in which sensors will be exposed to typical background levels (400-450ppm) at least once during the autocalibration period. For example, many buildings will drop quickly to background CO_2 levels when unoccupied overnight or on weekends. The autocalibration function uses the information gathered during these periods to recalibrate.

The autocalibration function uses the lowest point of CO_2 concentration to recalibrate the offset. During every measurement cycle, the CO_2 sensor stores the latest values, and also the lowest value recorded since the last calibration point. The first 50 measurements after calibration are ignored when calculating the lowest value.

Autocalibration Default Setting

The CO_2 sensor is shipped with the autocalibration feature enabled. There isn't any CO_2 measurement in the Factory Mode before the Commissioning. After the Commissioning all previous CO_2 measurement data stored in the sensor is erased.

By default the first autocalibration will happen 1 day after the commissioning, and the following autocalibrations in 8-day intervals.

It is normal for the sensor to display invalid readings during the first day following the initial installation and autocalibration. Minimum of 2 autocalibrations are required for accurate readings.

Due to our policy of continuous product innovation, some specifications may change without notification.
©LG Electronics U.S.A., Inc., Englewood Cliffs, NJ. All rights reserved. "LG" is a registered trademark of LG Corp.

ZigBee Pro Quick Setup

This quick set-up describes how to pair a ZigBee sensor with a Remote Controller. Please see ZigBee Configuration section of the MultiSITE CRC2 User Interface Guide (Network Config/ Zigbee settings via the CRC menu) if this is the first time a sensor is being paired with the remote controller for proper configuration of the ZigBee Wireless network.

1. Go to first sensor screen in Zigbee Ecosystem section of MultiSITE CRC2 Series Remote Controller's interface and set “Permit join” to On. Permit join is only available on the first Zone Screen but is applicable to all Zones.
2. Insert battery. Remove pull tab (for contact sensors) or press button for sensors without pull tab to activate ZigBee sensor. If sensor does not join ZigBee wireless network press the button located on the sensor ten (10) times to reinitialize joining process.
3. Verify sensor has joined network and Paired field status reads Yes on Zone screen.
4. Use the “Set function to” control in the Zone Screen to select sensor type (Motion, Window or Door).
5. Set Permit Join on MultiSITE CRC2 Series Remote Controller to Off when pairing process is complete.

Troubleshooting

MultiSITE CRC2 Series Remote Controller User Interface Guide is available at www.lghvac.com.

Due to our policy of continuous product innovation, some specifications may change without notification.
©LG Electronics U.S.A., Inc., Englewood Cliffs, NJ. All rights reserved. “LG” is a registered trademark of LG Corp.

Table 2: Function Button and LED Indicators

PICTURE	MODELS	BUTTON PRESS	ACTION	LED	DESCRIPTION
	ZVRCZMTH1	N/A	Removing Battery Isolation Tab / Replacing Batteries	G (x7)	See Action
	ZVRCZDWC1	3x < 1 s	Pairing	Y (1 / s) ⇨ G	Final solid green indiates successful pairing
	ZVRCZWLS1	3x < 1 s	Check Pairing	G (x5)	Paired
		3x < 1 s, 10s	Resetting	R (1 / s) ⇨ R ⇨ G (x7)	See Action
		N/A	N/A	Y (1 / min.)	Low Battery
	SEDCO2G5045	1x < 1 s	Pairing	Y (x2) ⇨ G (x3)	Pairing
	ZVRCZTRH1	1x for 3 s	Resetting	Y (x2) ⇨ R (x1) (release after 1st red)	Unpair
	ZVRCZCOC1	2x < 1 s	Network Status	G (x3)	Joined
				R (x3)	Not Joined
				Y (x3)	Re-join in Process
	ZVRCZDWS1	4x < 1 s	Network Join	Y ⇨ R ⇨ Y	Searching for Network
				Y ⇨ G ⇨ Y	Device Being Configured
				G (x3)	Device Joined
				R (x3)	Device Failed to Join
		8x < 1 s	Forced Re-join	Y (x3)	Re-join, Searching for Parent
		10x < 1 s	Network Leave and Join a New Network	R (x3)	Leave if Joined
				G (x5)	Defaults Restored
	ZVRCZWOC1		No Action	Y (x1)	Wrong Button Press
				Y ⇨ G ⇨ R	Device Busy
			Power Up	R (x2) ⇨ Y (x2) ⇨ G (x2)	N/A

Due to our policy of continuous product innovation, some specifications may change without notification.
©LG Electronics U.S.A., Inc., Englewood Cliffs, NJ. All rights reserved. "LG" is a registered trademark of LG Corp.

BACnet MS/TP Quick Setup

This quick set-up describes how to set-up the BACnet* MS/TP with a Remote Controller. Please see BACnet MS/TP Configuration section of the MultiSITE CRC2 User Interface Guide for complete instructions of the configuration of the BACnet MS/TP network.

1. Touch and hold top of the screen for 3 seconds to enter Configuration settings as illustrated in Figure 7 on page 14.
2. Navigate to the “Network Config” -->”BACnet settings” menu of the “Configuration” page.
3. Change the “COM Address.” Valid COM address range is 0-253. Note: COM address defaults to 254 which disables BACnet MS/TP.
4. Select “Network Units” (Imperial or Metric)
5. Select appropriate BAUD Rate. Note: “Auto” is the default setting and will auto detect baud rate of connected device.
6. Select BACnet Instance Number or use default BACnet Instance. Note: BACnet Instance number defaults to 8300 and the COM address. Example if the COM address is 57 the BACnet Instance number will be “83057.”
7. Ensure BACnet status reads Online.

Note

If optional Wi-Fi module is used the transport will be BACnet IP instead of BACnet MS/TP. In this case, BACnet configuration is only accessible via a web browser. Refer to the Wi-Fi Accessory Card installation manual for details.

**BACnet is a registered trademark of ASHRAE.*

Due to our policy of continuous product innovation, some specifications may change without notification.
©LG Electronics U.S.A., Inc., Englewood Cliffs, NJ. All rights reserved. “LG” is a registered trademark of LG Corp.

I/O Configuration

I/O support is available on all models of the MultiSITE CRC2 with a label containing the I/O symbol represented by circles and arrows in Figure 45. A minimum firmware version of 2.7.x is required to take advantage of this feature.

Figure 45: Typical CRC2 Label

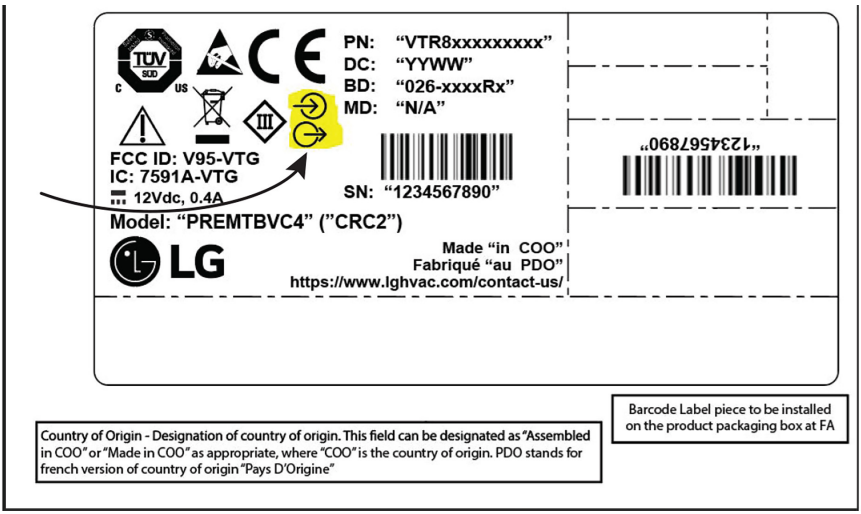

The inputs and outputs of the MultiSITE CRC2 series of controllers are configured and monitored via their associated BACnet points. The physical terminal layout for wiring to these inputs and outputs along with the BACnet points to configure and monitor them are shown in the table below. Lua scripts can also be used to write logic against all of the BACnet points available for the MultiSITE CRC2 to control the behavior of the inputs and outputs. Binary Output 5 (T8) is also controllable from the onboard scheduling application and can be toggled On or Off for each of the 5 daily schedule events (refer to the MultiSITE CRC2 Series Controllers User Interface Guide).

Due to our policy of continuous product innovation, some specifications may change without notification.
©LG Electronics U.S.A., Inc., Englewood Cliffs, NJ. All rights reserved. "LG" is a registered trademark of LG Corp.

I/O CONFIGURATION

Figure 46: Input/Output Configuration

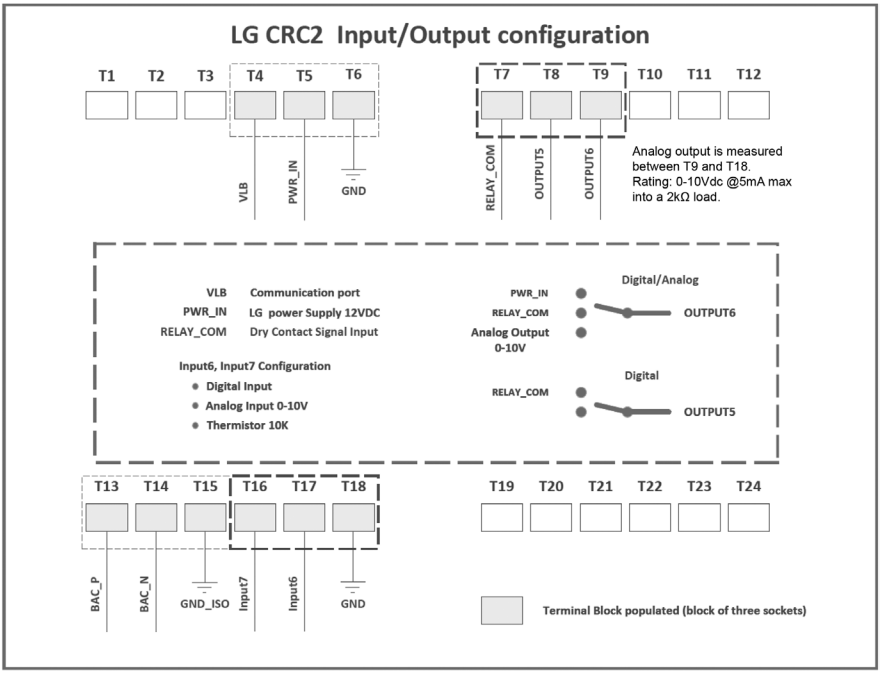

Table 3: Input/Output Configuration

	Physical Connection		I/O Type	BACnet Point Setting	BACnet Point Measurement	Note
Output 5	T8	T7	Binary Output	N/A	BO8 Auxiliary Binary Output (BO-98)	Electronic relay closure
Output 6	T9	T18	Analog Output	UO9 Configuration (MV-96) = 1	UO9 Analog Output (AO-125)	0-10Vdc @ 5mA max into a 2KΩ resistive load
	T9	T7	Binary Output	UO9 Configuration (MV-96) = 2	UO9 Binary Output (BO-93)	Electronic relay closure
Input 6	T17	T18	Temperature Input	UI17 Input Type (MV-139) = 1	UI17 Temperature (AV-118)	10K Type 2 NTC Thermistor Only
			Binary Input	UI17 Input Type (MV-139) = 2	UI17 Binary Input (BI-30)	Dry-contact closure
			Analog Input (0-10V)	UI17 Input Type (MV-139) = 3	UI17 Analog Input (AV-112)	Modulating 0-10Vdc
Input 7	T16	T18	Temperature Input	UI16 Input Type (MV-138) = 1	UI16 Temperature (AV-117)	10K Type 2 NTC Thermistor Only
			Binary Input	UI16 Input Type (MV-138) = 2	UI16 Binary Input (BI-29)	Dry-contact closure
			Analog Input (0-10V)	UI16 Input Type (MV-138) = 3	UI16 Analog Input (AV-111)	Modulating 0-10Vdc

Due to our policy of continuous product innovation, some specifications may change without notification.
©LG Electronics U.S.A., Inc., Englewood Cliffs, NJ. All rights reserved. "LG" is a registered trademark of LG Corp.

PREMTBVC2, PREMTBVC3, and PREMTBVC4

Dimensions

- Height: 4.72 in
- Width: 3.39 in
- Depth: 1.06 in

Power Requirements

- 12 VDC, 2.34W, supplied by IDU

Operating Conditions

- 32 °F - 122 °F
- 0% - 95% R.H. non-condensing

Storage Conditions

- -22 °F - 122 °F
- 0% - 95% R.H. non-condensing

Temperature Sensor

- Local 10 K NTC type 2 thermistor

Temperature Sensor Resolution

- ± 0.2 °F

Temperature Control Accuracy

- ± 0.9 °F @ 70 °F, typical calibrated

Humidity Sensor and Calibration

- Single point calibrated bulk polymer type sensor

Humidity Sensor Precision

- Reading range from 10-90 % R.H. non-condensing,
  10 to 20% precision: 10%
  20% to 80% precision: 5%
  80% to 90% precision: 10%

Humidity Sensor Stability

- Less than 1.0 % yearly (typical drift)

Dehumidification Setpoint Range

- 30% - 95% R.H.

Occ, Stand-By and Unocc Cooling Dual Setpoint Range

- 52 - 99 °F

Occ, Stand-By and Unocc Heating Setpoint Range

- 40 °F - 90 °F

Due to our policy of continuous product innovation, some specifications may change without notification.
©LG Electronics U.S.A., Inc., Englewood Cliffs, NJ. All rights reserved. "LG" is a registered trademark of LG Corp.

SPECIFICATIONS

Room Temperature Display Range

- 33 °F - 103 °F

Deadband (2 set point) for Room Temperature control

- Cooling & Heating: Default: 5°F

Input (universal inputs T16, T17)

- Temperature: Type 10K Thermistor
- Binary: Dry-contact closure
- Analog: Modulating 0-10Vdc

Output (universal output T9)

- Binary: Electronic relay closure rated at 12Vac or 12Vdc ±15%, 1.0A, 3.0A inrush
- Analog: 0-10Vdc @5mA max into a 2KΩ resistive load

Output (digital output T8)

- Binary: Electronic relay closure rated at 12Vac or 12Vdc ±15%, 1.0A, 3.0A inrush

Wire Gauge

- 22 gauge or larger

Approximate Shipping Weight

- 0.52 lb

THIS DEVICE COMPLIES WITH PART 15 OF THE FCC RULES. OPERATION IS SUBJECT TO THE FOLLOWING TWO CONDITIONS: (1) THIS DEVICE MAY NOT CAUSE HARMFUL INTERFERENCE, AND (2) THIS DEVICE MUST ACCEPT ANY INTERFERENCE RECEIVED, INCLUDING INTERFERENCE THAT MAY CAUSE UNDESIRED OPERATION.

Check with your local government for instruction on disposal of these products.

BACnet is a registered trademark of ASHRAE. ASHRAE does not endorse, approve or test products for compliance with ASHRAE standards. Compliance of listed products to the requirements of ASHRAE Standard 135 is the responsibility of BACnet International. BTL is a registered trademark of BACnet International.

Due to our policy of continuous product innovation, some specifications may change without notification.
©LG Electronics U.S.A., Inc., Englewood Cliffs, NJ. All rights reserved. "LG" is a registered trademark of LG Corp.

FCC Notice

This equipment has been tested and found to comply with the limits for a Class A digital device, pursuant to part 15 of the FCC Rules. These limits are designed to provide reasonable protection against harmful interference when the equipment is operated in a commercial environment. This equipment generates, uses, and can radiate radio frequency energy and, if not installed and used in accordance with the instruction manual, may cause harmful interference to radio communications. Operation of this equipment in a residential area is likely to cause harmful interference in which case the user will be required to correct the interference at his own expense.

This device complies with part 15 of the FCC Rules. Operation is subject to the following two conditions:

1. This device may not cause harmful interference and
2. This device must accept any interference received, including interference that may cause undesired operation of the device. Any changes or modifications in construction of this device which are not expressly approved by the party responsible for compliance could void the user's authority to operate the equipment.

Industry Canada Statement

Innovation, Science and Economic Development Canada ICES-003

Compliance Label:
CAN ICES (A) / NMB (A)

Innovation, science et développement économique Canada

ICES-003 Label de conformité :
CAN ICES (A) / NMB (A)

Due to our policy of continuous product innovation, some specifications may change without notification.
©LG Electronics U.S.A., Inc., Englewood Cliffs, NJ. All rights reserved. "LG" is a registered trademark of LG Corp.

LIMITED WARRANTY (USA)

The product's full Limited Warranty terms and conditions and arbitration requirements are available at https://www.lghvac.com.

Due to our policy of continuous product innovation, some specifications may change without notification.
©LG Electronics U.S.A., Inc., Englewood Cliffs, NJ. All rights reserved. "LG" is a registered trademark of LG Corp.

LG Customer Information Center, Commercial Products

1-888-865-3026 USA

Follow the prompts for commercial A/C products and parts.

The information below is for PREMTBVC2 and PREMTBVC3 models:

Supplier's Declaration of Conformity
47 CFR §2.1077 Compliance Information

Trade Name:	LG
Responsible Party:	LG Electronics USA, Inc.
Address:	1000 Sylvan Ave, Elglewood Cliffs, NJ 07632
Email:	lg.environmental@lge.com

LG Electronics
Air Solutions Technologies
4300 Northpoint Parkway
Alpharetta, Georgia 30022
www.lghvac.com

IM_CRC2_Series_Controllers_11_24
Supesedes: IM_CRC2_Series_Controllers_03_24
IM_CRC2_Series_Controllers_12_22
IM_CRC2_Series_Controllers_05_22
IM_CRC2_Series_Controllers_12_21
M_CRC2_Series_Controllers_11_21
IM_CRC2_Series_Controllers_9_21
IM_CRC2_Series_Controllers_7_21