OWNER'S MANUAL

LG OUTDOOR CAM PLUG-IN

Read this owner's manual thoroughly before operating the product.
Keep it handy for reference at all times.

www.lg.com

Copyright © 2026 LG Electronics. All Rights Reserved.

Table of Contents

Safety

Important Safety Instructions 4
- Read All Instructions Before Use 4
- Safety Information 5

Regulatory Information 9

Product Overview

Product Features 11
- Front View 11
- Side View 12
- Bottom View 13

Device LED 14

Installation

What's in the Box 15
- Part List 15

Step-by-Step Video Guides 17
- Tools You Need 17
- Choose a Location 19
- Mark and Drill the Holes 20
- Attach the Mounting Plate 22
- Mount Your Outdoor Camera 24
- Connect to Power 26
- Adjust the Camera Angle 28

Connection

Before You Begin 30
- System Requirements 30
- Using a Home Hub 31

Connecting via Apple Home App . . . 32
Connecting via NFC . . . 32
Connecting Manually . . . 33
Connecting via LG ThinQ App . . . 34
Connecting via NFC . . . 34
Connecting Manually . . . 35

Operation

Adjusting Angles . . . 36
Adjusting the Camera Lens Angle . . . 37
Factory Reset . . . 39
How to Reset . . . 39
Default Values after Factory Reset . . . 40
Apple Home Application Features . . . 41
LG ThinQ Application Features . . . 45

Maintenance

Regular Maintenance . . . 49
Firmware Update . . . 50

Troubleshooting

Before Calling for Service . . . 51

Appendix

Product Specifications . . . 54
Warranty . . . 55
Trademarks and Licenses . . . 68
Wi-Fi . . . 68
Bluetooth® . . . 68
Open Source Software Notice Information . . . 69

Safety

Important Safety Instructions

Read All Instructions Before Use

Safety Messages

Your safety and the safety of others are very important.

We have provided many important safety messages in this manual and on your appliance. Always read and follow all safety messages.



This is the safety alert symbol.

This symbol alerts you to potential hazards that can kill or injure you and others.

All safety messages will follow the safety alert symbol and either the word WARNING or CAUTION.

These words mean:



WARNING

You may be killed or seriously injured if you do not follow instructions.



CAUTION

You may be injured or cause damage to the product if you do not follow instructions.

All safety messages will tell you what the potential hazard is, tell you how to reduce the chance of injury, and tell you what may happen if the instructions are not followed.

Safety Information

⚠ WARNING

You may be killed or seriously injured if you do not follow instructions.

- When installing the device at a height, use a sturdy and stable ladder placed on level ground. Exercise extreme caution to prevent falls and use an assistant to hold the ladder.
- Ensure the power is turned off at the circuit breaker or fuse box before installing or servicing the device to prevent electric shock.
- All wiring connections must comply with local electrical codes and standards. If you are unfamiliar with electrical wiring, consult a qualified electrician.
- Ensure the device is properly grounded during installation to prevent electric shock, especially in the event of a short circuit or lightning.
- Do not attempt to disassemble or modify the device. High voltage internal components pose a risk of severe electric shock even when the power is off.
- Securely mount the device to a wall or eave capable of supporting its weight. Improper installation may cause the device to fall, resulting in injury or damage.
- Verify that all weather-resistant gaskets and covers are tightly sealed during installation to prevent water ingress, which could cause short circuits or fire.
- In some jurisdictions, recording audio or video without consent is illegal. It is the user's responsibility to know and obey local laws regarding surveillance and lighting affecting neighboring properties.
- Never attempt to operate this device if it is damaged, malfunctioning, partially disassembled, or has missing or broken parts, including a damaged cord or plug. Take it to an authorized LG Electronics service center or dealer for assistance.
- Do not use or store fire, combustibles (ether, benzene, alcohol, drugs, propane, butane, combustible sprays, insecticide, air freshener, cosmetics, etc.) or flammable materials (candles, lamps, etc.) near the device.
- Do not allow children to play with or hang on the device.
- Do not use the camera if the enclosure, cable, connector, or seal is damaged.
- Keep this device and all cables out of reach of children.
- Keep small parts and packaging materials away from children to reduce the risk of choking or suffocation. If a small part is swallowed or an injury occurs, seek medical attention immediately.
- Do not use the product in environments with excessive dust, smoke, oil, or corrosive substances. Do not use the product near strong electromagnetic fields or sources of radio-frequency interference.
- Contains magnets. Keep away from pacemakers, ICDs, and other implanted medical devices. Follow the device manufacturer’s recommended separation distance.

- During a thunderstorm or when lightning is present, disconnect the product and power adapter from power if it is safe to do so. Do not touch the product, power adapter, plug, cables, or connectors during a thunderstorm.
- Liquid damage voids all warranty coverage.
- Keep credit cards, bank cards, and magnetic storage media at least 2 in (5 cm) away from the product and its magnetic components. Magnets may damage or erase data stored on magnetic media.

⚠ CAUTION

You may be injured or cause damage to the product if you do not follow instructions.

- Avoid installing the camera behind glass or too close to a side wall. Infrared (IR) light reflection may cause glare and degrade night vision quality.
- When routing cables, create a drip loop to prevent water from running along the cord into the power connection points.
- Avoid pointing the camera directly at the sun or other strong light sources, as this may damage the image sensor or degrade video quality.
- Do not apply paint or stickers to the camera housing. Doing so can block the sensor, trap heat, and void the warranty.
- Install the camera within the range of your Wi-Fi router. Weak signal strength may cause video lag or connection failures.
- Do not use abrasive cleaners, solvents, or high-pressure water sprays on the device. Clean the lens gently with a soft, damp cloth.
- Do not touch the camera lens directly with your fingers. Oil from skin can blur the image and degrade video clarity.
- Install the device at the recommended height (usually 7-10 feet) to ensure optimal camera viewing angles.
- Regularly check the tightness of the mounting screws, as wind and vibration can loosen the device over time.
- Do not subject the product to shocks or drop it.
- This product is rated IP65. Do not submerge the device in water or expose it to high-pressure water sprays.
- Do not place anything on top of the product.
- Do not dry a wet device using an external heat source.
- Dispose of this appliance according to local, state, and regional laws and regulations. Contact your local city council or the related government authority before disposing of this device.
- When not in use, store the product in a cool, dry, and secure location. Keep it away from direct sunlight, heat sources, excessive moisture, children, and pets. Disconnect power, if applicable, before long-term storage.
- Check the operating temperature range specified in the technical specifications. Exposure to extreme cold or heat may temporarily disable the device or affect its performance. In particular, overheating may reduce performance, weaken or interrupt network connectivity, or cause the device to shut down automatically. Allow the device to cool to within its specified operating temperature range before using or charging it again. Prolonged exposure to high temperatures may create a fire hazard.

- Do not use, charge, store, or leave the product in temperatures above 140 °F (60 °C), including on a vehicle dashboard, near heating vents, heaters, radiators, stoves, or other heat sources. Keep the product and power adapter away from heat sources and direct sunlight. If the product or power adapter becomes unusually hot, disconnect it from power immediately, if it is safe to do so. Move it to a cool, well-ventilated location and allow it to cool completely before handling, charging, or using it again. Do not use the product if it is damaged, emits an unusual odor, or continues to overheat.
- The product may become hot during use. Keep it away from flammable materials, and do not cover or block the ventilation openings.
- Keep the product free of excessive dust and lint. Dust buildup may block ventilation and cause overheating or reduced performance. Disconnect power before cleaning.

NOTE

- "If the product is frequently exposed to rain or installed in a location vulnerable to direct rainfall, purchase and install a commercially available rain cover separately. A rain cover may help reduce direct exposure to rain on the lens and front of the product, which may help maintain more consistent image quality. You are responsible for selecting, installing, and maintaining the rain cover. LG does not guarantee or warrant the performance or quality of any third-party product."

Legal Compliance Notice

- It is the user's sole responsibility to ensure that the use of this product complies with all applicable local, state, and federal laws regarding surveillance and privacy. Laws regarding the recording of video and audio vary by jurisdiction and may require the consent of all recorded parties. LG Electronics assumes no liability for any use of this product that fails to comply with applicable laws.

Regulatory Information

FCC Notice

This equipment has been tested and found to comply with the limits for a Class B digital device, pursuant to Part 15 of the FCC Rules. These limits are designed to provide reasonable protection against harmful interference in a residential installation. This equipment generates, uses, and can radiate radio frequency energy and, if not installed and used in accordance with the instructions, may cause harmful interference to radio communications. However, there is no guarantee that interference will not occur in a particular installation. If this equipment does cause harmful interference to radio or television reception, which can be determined by turning the equipment off and on, the user is encouraged to try to correct the interference by one or more of the following measures:

- Reorient or relocate the receiving antenna.
- Increase the separation between the equipment and the receiver.
- Connect the equipment to an outlet on a circuit different from that to which the receiver is connected.
- Consult the dealer or an experienced radio/TV technician for help.

Supplier's Declaration of Conformity
47 CFR §2.1077 Compliance Information
Trade Name: LG
Responsible Party: LG Electronics USA, Inc.
Address: 111 Sylvan Avenue, North Building, Englewood Cliffs, NJ 07632
Email: lg.environmental@lge.com

This device complies with part 15 of the FCC Rules. Operation is subject to the following two conditions:

(1) This device may not cause harmful interference and

(2) This device must accept any interference received, including interference that may cause undesired operation.

Any changes or modifications in construction of this device which are not expressly approved by the party responsible for compliance could void the user's authority to operate the equipment.

FCC RF Radiation Exposure Statement

This equipment complies with FCC radiation exposure limits set forth for an uncontrolled environment. This transmitter must not be co-located or operating in conjunction with any other antenna or transmitter.

This equipment should be installed and operated with a minimum distance of 20 cm (7.8 inches) between the antenna and your body. Users must follow the specific operating instructions for satisfying RF exposure compliance.

FCC Radio Frequency Interference Requirements:

High power radars are allocated as primary users of the 5.25 to 5.35 GHz and 5.65 to 5.85 GHz bands. These radar stations can cause interference with and/or damage this device. This device cannot be co-located with any other transmitter.

Industry Canada Statement

This device contains licence-exempt transmitter(s)/receiver(s) that comply with Innovation, Science and Economic Development Canada's licence-exempt RSS(s).

Operation is subject to the following two conditions:

(1) This device may not cause interference.

(2) This device must accept any interference, including interference that may cause undesired operation of the device.

CAN ICES (B) / NMB (B)

IC Radiation Exposure Statement

This equipment complies with IC radiation exposure limits set forth for an uncontrolled environment. This equipment should be installed and operated with a minimum distance of 20 cm (7.8 inches) between the antenna and your body.

NOTE: THE MANUFACTURER IS NOT RESPONSIBLE FOR ANY RADIO OR TV INTERFERENCE CAUSED BY UNAUTHORIZED MODIFICATIONS TO THIS EQUIPMENT. SUCH MODIFICATIONS COULD VOID THE USER'S AUTHORITY TO OPERATE THE EQUIPMENT.

Wireless Communication Notice

5150-5350 MHz is indoor use only.

Users should also be advised that high-power radars are allocated as primary users (i.e. priority users) of the bands 5250-5350 MHz and 5650-5850 MHz and that these radars could cause interference and/or damage to LE-LAN devices.

Product Overview

Product Features

Review this section to understand each component on your device and its function.

Front View

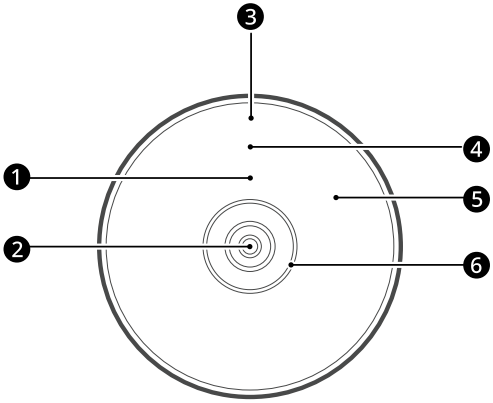

1. **Light Sensor**

   Measures brightness to automatically switch night vision in the dark.

2. **Camera Lens**

   Provides up to 2K resolution with an adjustable viewing angle.

3. **Microphone**

   Captures audio from the device's surroundings so you can hear sounds through the app.

4. **Device LED**

   Indicates the device's current status through different colors and blink patterns.

   For detailed instructions, see *Device LED*.

5. **Infrared Light**

   Located around the **Camera Lens** on the front and automatically turns on in low-light or dark environments to enable clear night vision.

6. **NFC Antenna**

Hold your phone near this area for quick connection.

For detailed instructions, see *Connecting via NFC*.

Note

Illustrations may differ from the actual product.

Side View

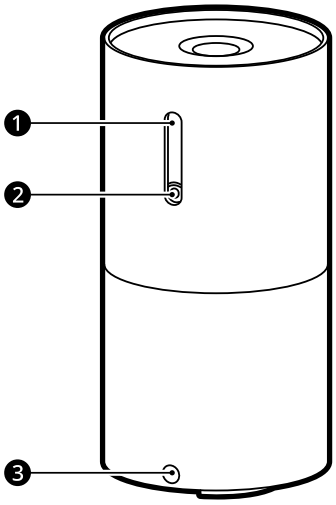

1. **Speaker**

   Enables talking to people around the device and plays siren alerts and notification sounds.

2. **Fixing Screw**

   Tighten with the **Screw Wrench** to fix the camera angle.

3. **Locking Screw Hole**

   Insert the **Locking Screw** into this hole and tighten to secure the device and cover.

Note

Illustrations may differ from the actual product.

Bottom View

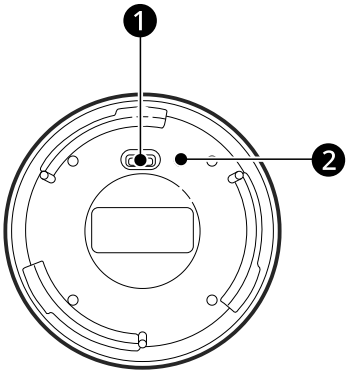

1 **USB Type-C Port**

Connect the **USB-C Cable** to supply power to the device. The device turns on automatically once power is connected.

2 **Option Button**

Performs different functions depending on how long you press and hold it.

- Press and hold for 3 - 10 seconds to change the Wi-Fi network.
- Press and hold for 10 - 20 seconds to perform a factory reset.
- Press and hold for more than 20 seconds to cancel an unintended action.

Note

Illustrations may differ from the actual product.

Device LED

The **Device LED** on the device lights up when the device is powered on. Refer to the table below to understand each pattern.

LED Color	LED Pattern	Status
	Solid	Power on
	Blinking	Network reset
	Blinking	Waiting for connection
	Alternating blink	Connecting to AP
	Blinking	Connected to AP
	Solid	Connected to server (Connection completed)
	Blinking fast	Siren
	Blinking	Factory Reset
	Solid	Live view / Two-Way Talk / Camera Ready

Note

You can turn the **Device LED** on or off.

Installation

What's in the Box

Part List

Verify that all the parts listed below are included in the package. If any of the parts are missing or damaged, contact the retailer or customer support immediately.

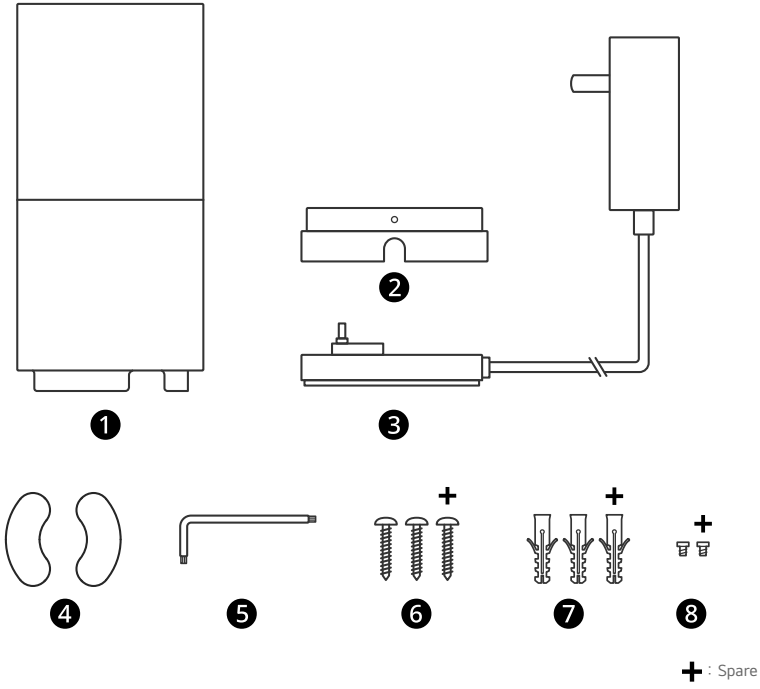

1. LG Outdoor Cam Plug-In
2. Mounting Plate Cover
3. Mounting Plate with Power Cable
4. Waterproof Sheets
5. Screw Wrench (TORX T8)
6. Mounting Screws (M4 × 25)
7. Anchors (M6 × 30)
8. Locking Screws

Note

- Check that all parts are included before installation.
- Illustrations may differ from the actual product.
- The provided adapter may differ by country.
- One of the **Locking Screws** is a spare screw.

Step-by-Step Video Guides

To ensure a correct installation, follow the steps in order.

Read all warnings, cautions, and notes carefully before you begin.

Plan for this installation to take about 25 minutes.

Caution

Use Manual Tools Only: To prevent damage to the device or stripping of the screw threads, do not use a power screwdriver or drill for assembly. Use a manual Phillips screwdriver instead.

Note

Make sure to connect your device in the app before installation. After it's mounted, connection can be difficult.

Tools You Need

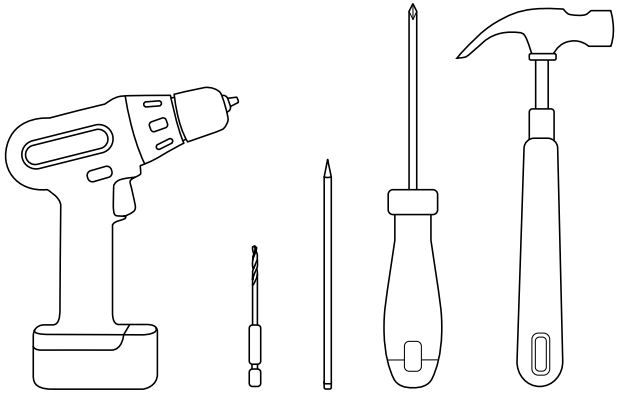

Tools You Need
Drill
Drill bit
Pencil

Tools You Need
Phillips screwdriver
Hammer

Choose a Location



- Choose an installation location that provides a clear view of the area you want to monitor with your camera.
- Do not point your camera directly at the sun or another strong light source. Direct light may damage the image sensor or reduce video quality.
- For best results, install your camera 7 - 10 ft (2.1–3 m) above the ground.
- Choose a location with a strong Wi-Fi connection.
- Temporarily power on the camera using a USB-C cable and a portable charger, connect the camera to the app, and check your desired viewing angle in live view.

Note

- Installation under an eave or covered area is recommended.
- The camera enclosure is rated IP65 in accordance with IEC 60529 when properly installed.
- The IP65 rating does not apply to the power adapter, power cable, connectors, or any other accessories. Keep these components dry and protected from rain, splashing water, moisture, and other liquids.
- Do not use the camera if the enclosure, cable, connector, or seal is damaged.
- Liquid damage voids all warranty coverage.

Mark and Drill the Holes

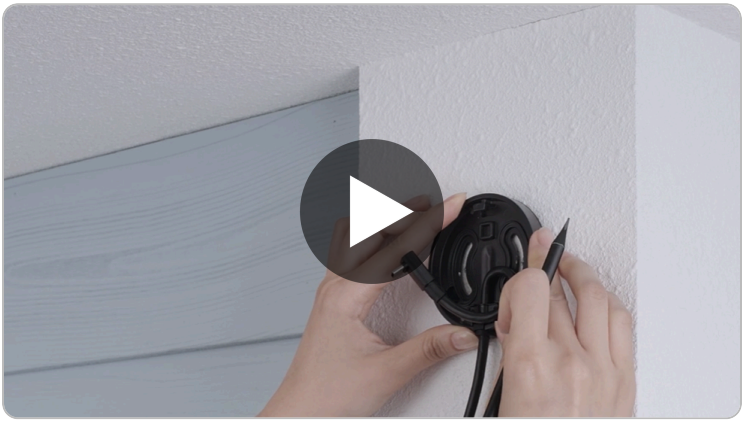

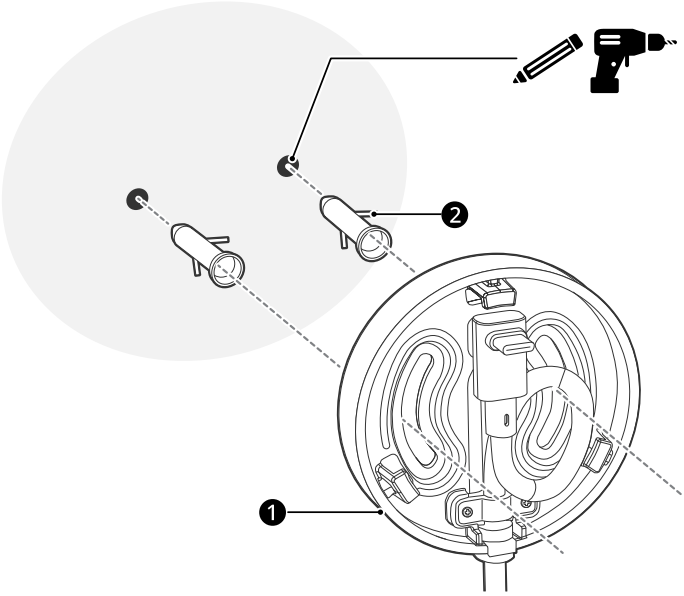

❷ : M6 × 30

1. Hold the **Mounting Plate** ❶ against the wall or eave.
2. Use the screw holes in the **Mounting Plate** to mark the drill points.
3. Before you drill into the wall, locate any electrical wiring and plumbing behind it.
4. Drill holes at the marks.
5. If you're mounting your camera on drywall, gently tap the provided **Anchors** ❷ into the holes with a hammer.

Note

- If you're mounting your camera to a stud, you don't need the **Anchors**.
- Drill Hole: Ø6 mm, 35 mm deep

Attach the Mounting Plate

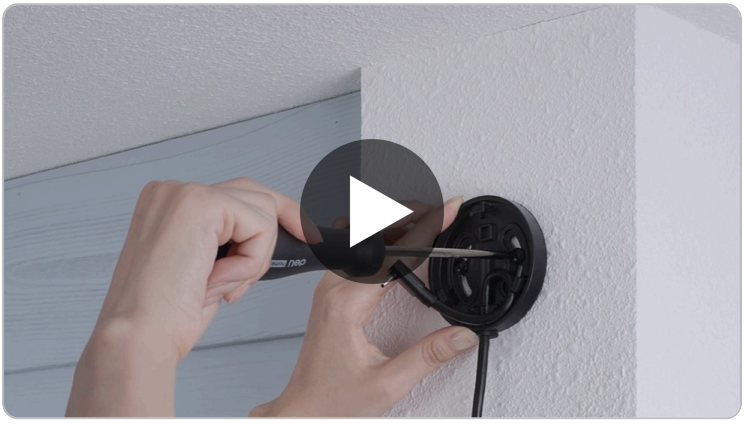

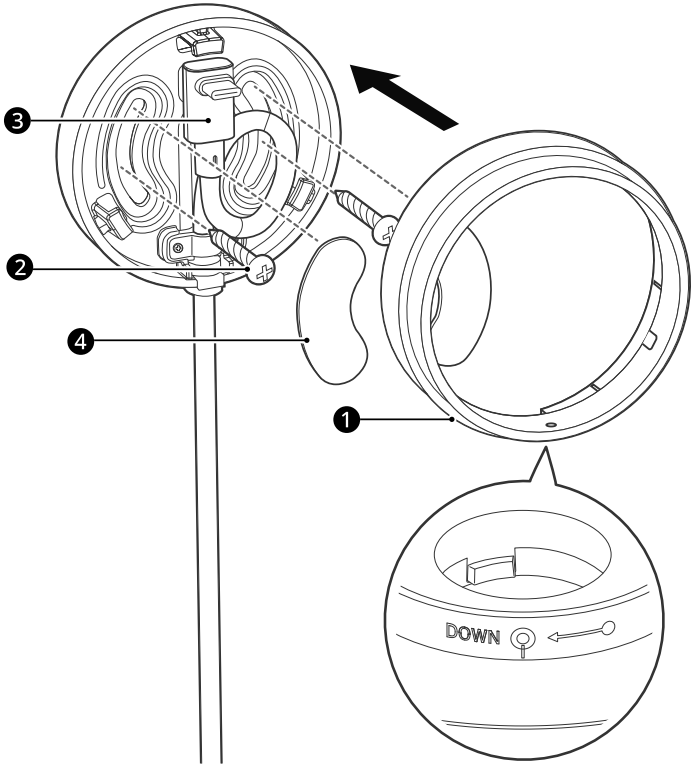

❷ : M4 × 25

1. Remove the **Mounting Plate Cover** ❶ from the **Mounting Plate**.
2. Secure the **Mounting Plate** with the **Mounting Screws** ❷.

> ⚠ **Caution**
>
> - Do not use any screw other than the included **Mounting Screws**.
> - Give the **Mounting Plate** a gentle shake to make sure it's secure.

3. Position the **Mounting Plate** with the **Power Cable** ❸ facing down.
4. Attach the **Waterproof Sheets** ❹ to the **Mounting Plate**.
5. Attach the **Mounting Plate Cover** to the **Mounting Plate** with the hole facing down.

Mount Your Outdoor Camera

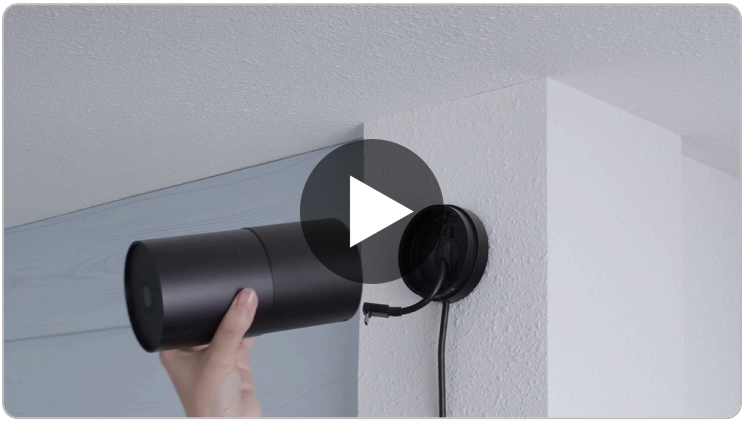

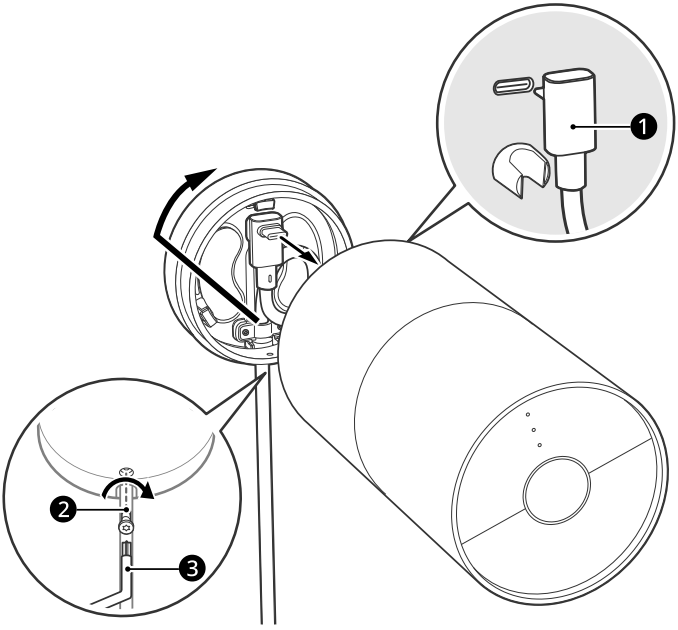

❸ : TORX T8

1. Connect the **Power Cable** ❶ from the **Mounting Plate** to the USB-C port on the back of your camera.
2. Press the **Power Cable** into the cable holder to secure it in place.
3. Place your camera on the **Mounting Plate**.
4. Turn your camera clockwise until it locks into place.
5. Tighten the **Locking Screw** ❷ in the hole at the bottom of your camera with the **Screw Wrench** ❸ to secure it.

Connect to Power



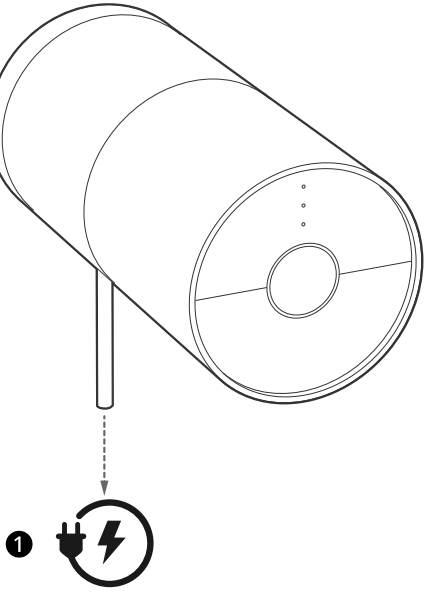

Plug the **Adapter** ❶ into a power outlet.

Note

- When your camera is connected to power, the **Device LED** turns on.
- If an outdoor power outlet isn't available, drill a hole through the wall and route the **Power Cable** to an indoor power outlet.
- If the **Device LED** keeps blinking, check the Wi-Fi signal strength.
- If the Wi-Fi router is too far from your camera, move the router indoors and closer to your camera.

Adjust the Camera Angle



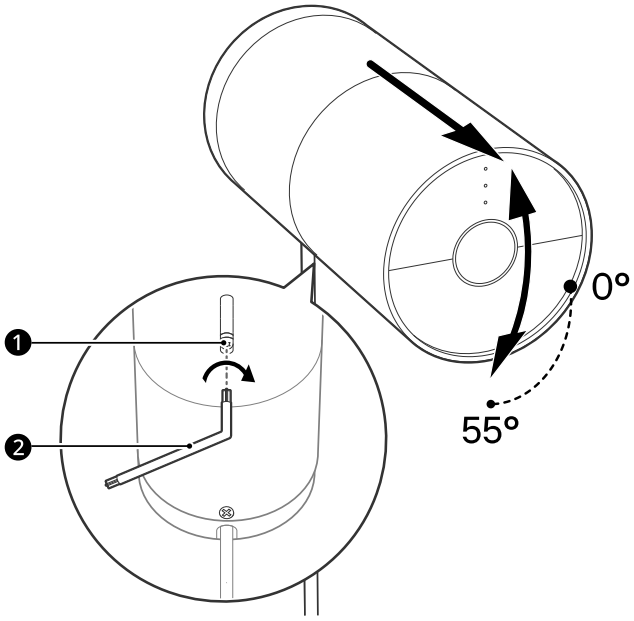

❷ : TORX T8

1. Pull the front of your camera outward.
2. Adjust the lens to the viewing angle you want.

> **Note**
>
> - You can adjust the angle up to 55°.
> - After your camera is powered on and connected to the app, use live view to check the camera angle.

3. Once the angle is set, tighten the **Fixing Screw** ❶ at the bottom of your camera with the **Screw Wrench** ❷ to secure the angle.

Connection

Before You Begin

Connection methods vary depending on your phone OS and the app you use. Refer to the corresponding section below to connect your device correctly.

Before you begin, make sure your phone, network, and any other required devices meet the requirements listed in this section.

> **Note**
>
> - Keep the device and phone within close range of each other during setup.
> - The NFC antenna location varies by phone manufacturer and model. If the device isn't recognized, try moving the top or center of your phone near the NFC label.
> - If the device is having trouble connecting to the Wi-Fi network, it may be too far from the router. Purchase a Wi-Fi repeater (range extender) to improve the Wi-Fi signal strength.

System Requirements

To connect and use your device, your phone must run a compatible operating system (OS) version and meet the following requirements.

- Operating System: For a stable experience, use a phone running **iOS 15.0 or later** or **Android 10.0 or later**.
- Wi-Fi Network: Your device supports **2.4 GHz and 5 GHz** Wi-Fi networks (IEEE 802.11 b/g/n/ac).
  - Use **WPA2 or WPA3** encryption for a secure connection.
  - Captive portal networks (commonly used in hotels, cafes, or airports that require a web-based login) aren't supported.
  - If the distance between the device and the wireless router is too far, the signal strength becomes weak. It may take a long time to connect or installation may fail.
- Bluetooth: Turn on Bluetooth on your phone before connecting.

Using a Home Hub

A home hub isn't required, but adding a compatible home hub **(such as a HomePod or Apple TV 4K running tvOS 16.1 or later)** lets your device act as part of your smart home, enabling remote control and automations by securely connecting your devices to the network.

Features of Using a Hub

- **Remote Access and Recording**: Control your device, and then check its status from anywhere in the app.
- **Face Recognition**: Receive notifications when people you've tagged in the photos app are within the camera's view.
- **Real-time Notifications**: Receive instant alerts on your phone when the device is operated or an event occurs.
- **Automations**: Connecting multiple IoT devices allows you to create customized scenes and routines tailored to specific situations or times of day (for example, turning on the lights when you arrive home).
- **Activity Zones**: Activity will be detected inside/outside the selected area.

Note

- The hub must remain powered on and connected to a stable Wi-Fi network at all times.
- For the best connection, keep a clear line of sight between the device and your always-on hub.

Connecting via Apple Home App

You can connect your device using the **Apple** Home app. Use **NFC** for the fastest setup. It works even when the device is powered off.

Note

- Make sure your **Wi-Fi router** is powered on and connected to the internet.
- Your iPhone must be on the same Wi-Fi network that the device uses.
- Keep the device and iPhone within close range of the router during setup.

Connecting via NFC

Follow the steps below to connect your device using **NFC**.

1. Hold the iPhone's NFC antenna near the NFC symbol on the product. If a setup card Appears Automatically.

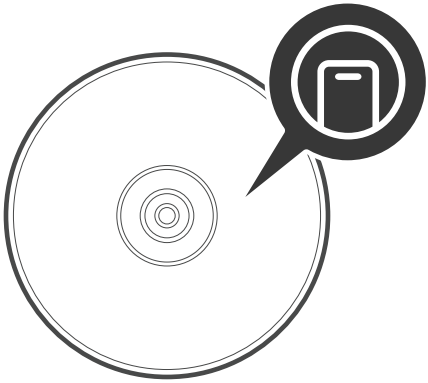

2. The device is added to the Home app and appears as **Begin Installation**.
3. Tap **Continue** and then follow the on-screen instructions to finish the setup. If the product is not already powered on, connect it to a power source.
4. Assign a room and a name for the device. The device is added to the Home app.

Note

- If NFC connection fails, remove your phone case and try again. Thick or metallic cases may interfere with NFC recognition.
- This feature is supported only on phones manufactured by Apple.

Connecting Manually

You can connect your device manually. Choose the method below that your device supports.

1. Enable Bluetooth on your iPhone and then connect it to your Wi-Fi network.
2. Open the **Apple** Home app, tap **+** in the top-right corner and then tap **Add Accessory**.
3. Scan the QR code on the device, or use the printed label included in the manual box.

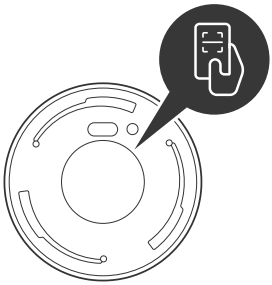

4. If the connection isn't completed using the methods above, tap **More Options...**, and then add the device in one of the following ways:
   - Select the device you want to add from the **Nearby Accessories** list.
   - Enter the setup code (shown below the QR code) in the blank boxes, and then tap **Continue**.
5. Tap **Continue** and then follow the on-screen instructions to finish the setup.
6. Assign a room and a name for the device. The device is added to the Home app.

Note

The device must be powered on to connect.

Connecting via LG ThinQ App

You can connect your device using the **LG ThinQ** app. Use NFC for the fastest setup.

Note

- Make sure your **Wi-Fi router** is powered on and connected to the internet.
- Your phone must be on the same Wi-Fi network that the device uses.
- Keep the device and phone within close range of the router during setup.
- The device must be powered on to connect.

Connecting via NFC

1. Enable Bluetooth on your phone and then connect it to your Wi-Fi network.
2. Open the **LG ThinQ** app, tap **+** in the top-right corner and then tap **Add Product**. Select your device.
3. Make sure the device is installed and powered on, and then tap **I've turned it on**.
4. Hold your phone near the NFC area on the device, following the on-screen guide.

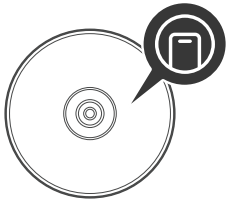

5. Follow the remaining on-screen instructions to complete the connection.

Note

If NFC connection fails, remove your phone case and try again. Thick or metallic cases may interfere with NFC recognition.

Connecting Manually

Complete steps 1 to 3 in *Connecting via NFC* first.

1. Tap **Add without NFC** and enter your Wi-Fi network password when prompted.
2. Press and hold the **Option Button** for at least 3 seconds to enter the Wi-Fi station mode.

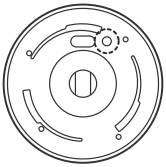

3. Wait while the app finds and adds your device.
4. Follow the remaining on-screen instructions to complete the connection.

Operation

Warning

To reduce the risk of fire, electric shock, or injury to persons, read the **Important Safety Instructions** before operating this appliance.

Adjusting Angles

Adjust the **Camera Lens** angle by hand.

Note

Angle adjustment is not available through the app.

Warning

Always wear gloves before making any adjustments.

Adjusting the Camera Lens Angle

0° is the position where the **Camera Lens** faces the same direction as the camera body, and you can tilt the **Camera Lens** downward from 0° to 55°.

Follow the steps below to adjust the **Camera Lens** angle.

1. Loosen the **Fixing Screw** with the **Screw Wrench** before pulling the lens.

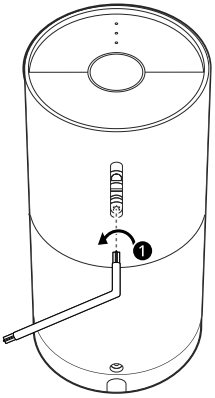

2. Pull the **Camera Lens** outward until it fully extends from the camera body.
3. Tilt the lens downward to the desired angle within the 0° to 55° range.

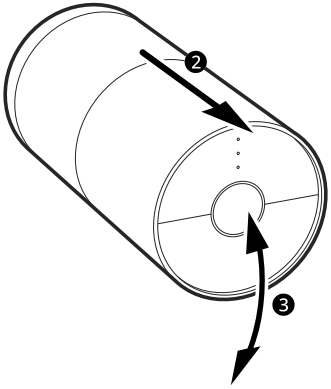

4. Tighten the **Fixing Screw** with the **Screw Wrench** to secure the camera angle.

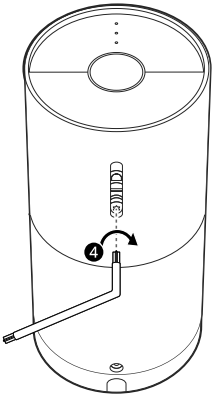

⚠ Caution

Carefully adjust the angle of the **Camera Lens** and don't force it beyond its natural stopping point, to prevent product damage.

Factory Reset

A factory reset erases all settings and video recordings, and restores your device to its default state. Perform a factory reset when restarting doesn't resolve the issue, or when you transfer the device to another user.

Note

- To connect the device to a different account, remove it from the current account first.
- All video recordings stored on the local storage are permanently deleted and can't be recovered. Make sure to download any video recordings you need before you reset.

How to Reset

Warning

- Before detaching the device from the **Mounting Plate**, unplug the power cable from the power outlet to completely cut off power.
- Always wear gloves before handling the device.

To perform a factory reset, follow the steps below.

1. Unplug the power cable from the power outlet.
2. Remove the **Locking Screw** from the **Locking Screw Hole** at the bottom of the device.
3. Turn the device counterclockwise to detach it from the **Mounting Plate**.
4. Connect the **USB-C Cable** to the **USB Type-C Port** of the device.
5. Press and hold the **Option Button** on the bottom of the device for 10 - 20 seconds.

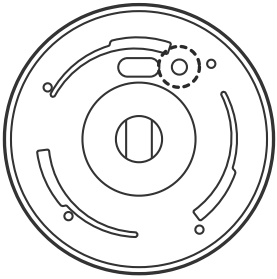

6. After the reset is complete, your device returns to its default settings.

To use the device again, complete the device connection process. For detailed instructions, see *Connecting via Apple Home App* or *Connecting via LG ThinQ App*.

> **Note**
>
> If you accidentally trigger the factory reset, don't release the **Option Button** and hold it for 20 seconds to cancel.

Default Values after Factory Reset

When a factory reset is performed, the following settings are restored to their default values.

Item	Default Value
Night Vision	Auto
AI Detection	Off
AI Detection Sensitivity	Medium
Camera Microphone	Off
Camera Sound Setting	Medium
Camera Status LED	On
Video Settings - Timestamp	Off
Video Settings - Live Status	On
Video Settings - Bit rate (kbps)	Off
Video Settings - Flip Image	Off
Video Settings - Anti-Flicker Settings	50/60 Hz (varies by country)
Siren Duration	15 sec
Firmware	Current version retained (downgrade isn't supported)

Apple Home Application Features

Communicate with the device from a smartphone using the convenient smart features.

- **Pairing**
  Add your device to the app so you can control and monitor it from your phone.
- **Room**
  Select the room where you installed the device. You can choose the room when you add the device and change it later in the device settings.
- **Name the Camera**
  Give the device a recognizable name so you can easily find and manage it in the app. You can name the device during onboarding and change it later in the device settings.
- **Accessories**
  Displays a list of accessories included with the product.
- **Add to Home View**
  Select whether to show the product tile in the Home view.
- **Live View**
  You can watch live video. The quality is automatically adjusted based on your network condition.

  > **Note**
  > Remote access is available only when the device is connected to a home hub.

- **Recorded Clip**
  When an event is detected during streaming, an event clip bar appears on the timeline. Scrub the timeline to find and play it.

  > **Note**
  > Available only when a home hub is connected.

- **Video Screen Features**
  The following features are available on the video screen.
  - **Connected Camera List**
    See the list of connected cameras to switch to another camera's live view.

- **Status**
  Displays the current status of your device.
- **Speaker Control**
  Turns the audio on or off from the camera's **Microphone** in the app.
- **PIP (Picture in Picture)**
  Shrinks the live video into a small window so you can keep watching while using other apps.
- **Camera Settings**
  Takes you to the camera settings screen.
- **Nearby Accessories**
  Control nearby accessories added to the Home. Includes camera lighting with on or off and brightness control.
- **Microphone Control**
  Enables two-way communication.
- **Export Video Clip**
  Download event clips to your phone's gallery. (Available only when a home hub is connected.)

- **Two-Way Talk**
  Listen to sounds and speak to people near the device while watching live video.
- **Night Vision Light**
  Automatically turn on the built-in night vision light in the camera when it's dark.
- **Camera Status Light**
  Turn the **Device LED** on or off (on by default).
- **Add Automation**
  Create automation based on camera motion detection.

> **Note**
> - AI detection may not be 100% accurate. This feature is provided as a convenience to assist with monitoring, and results may vary depending on the installation environment.
> - When using AI features, ambient sounds and voices may be recorded.
> - Available only when a home hub is connected.

- **Status and Notifications**
  Configure which notifications you receive from the camera and whether they appear in Home summaries.

> **Note**
>
> Available only when a home hub is connected.

- **Recording Options**

  Configure recording settings based on whether you're home or away.

> **Note**
>
> - AI detection may not be 100% accurate. This feature is provided as a convenience to assist with monitoring, and results may vary depending on the installation environment.
> - When using AI features, ambient sounds and voices may be recorded.
> - Available only when a home hub is connected.

- **Face Recognition**

  The camera recognizes family and friends by matching faces with your photo library, then sends you an alert with their names.

> **Note**
>
> Available only when a home hub is connected.

- **Activity Zones**

  Activity will be detected inside/outside the selected area.

> **Note**
>
> Available only when a home hub is connected.

- **Camera Speaker**

  Adjust the sound level of the device **Speaker**.

- **Accessory Info**
  - **Manufacturer**
  - **Serial Number**
  - **Model**
  - **Firmware**

- **Log**

  Download logs to the iPhone.

- **Documentation**

  – **Owner's Manual**

  – **Release Notes**

  – **Troubleshooting**

- **Image Settings**

  – **Anti-Flicker**

  Adjust the frequency to reduce black lines in the video.

  – **Image Orientation**

  If the live video appears upside down, flip the view both vertically and horizontally.

  – **Dewarped View**

  Corrects lens distortion for a more natural and realistic view.

- **Proximity Control**

  Choose what happens when you bring this device near this accessory. This also applies when you tap the accessories with this device.

LG ThinQ Application Features

Communicate with the device from a smartphone using the convenient smart features.

- **Live Video Streaming**
  Watch live video in up to 2K quality. The quality is automatically adjusted based on your network condition.

  > **Note**
  > All recordings are saved in 2K.

- **Playing Event Clips on the Timeline**
  When an event is detected during streaming, an event clip bar appears on the timeline. Scrub the timeline to find and play it.

- **Video Screen Features**
  The following features are available on the video screen.
  - **Sound**
    Turns the audio on or off from the camera's **Microphone** in the app.
  - **Playback Speed**
    Adjust the playback speed of the video.
  - **Switch to Full Screen**
    Watch the video in full screen.
  - **PIP (Picture in Picture)**
    Shrinks the live video into a small window so you can keep watching while using other apps.
  - **Zoom In or Out**
    Spread two fingers apart to zoom in. Pinch two fingers together to zoom out.

- **Capture and Record**
  Capture screenshots and record video from the video screen.

- **Two-Way Talk**
  Listen to sounds and speak to people near the device while watching live video.

  > **Note**
  > Only one user can use Talk at a time.

- **Activity Log**

  Open the **Activity Log** to see detected events in time order.

  > **Note**
  >
  > When the local storage is full, the oldest clips are automatically deleted to make space for new ones.

- **Per-Zone Detection**

  Set up to 4 zones so the device detects activity only in the areas you choose.

- **Line Crossing Detection**

  Draw up to 4 lines to detect movement across them. Set each line's direction to left, right, or both.

- **AI Detection**

  The device uses on-device AI to detect motion and save event clips.

  – **AI Detection Settings**
  Choose what the AI detects: person, animal, vehicle and motion.

  – **AI Detection Sensitivity**
  Adjust detection sensitivity for each AI object. High sensitivity increases detection frequency, while low sensitivity decreases it.

  > **Note**
  >
  > - AI detection may not be 100% accurate. This feature is provided as a convenience to assist with monitoring, and results may vary depending on the installation environment.
  > - When using AI features, ambient sounds and voices may be recorded.
  > - Detecting all motion may result in frequent notifications and recordings.

- **Siren**

  You can trigger a loud siren from your device to deter potential intruders or alert people nearby during an emergency.

  – **Change the Siren Duration**
  You can set how long the siren sounds before it stops automatically.

> **Note**
>
> The siren does not automatically contact emergency services.
>
> If you need help, check the situation and contact emergency services directly.

- **Night Vision**

  Night vision lets the device record clearly in low light or darkness.

> **Note**
>
> **Night Vision** settings apply to both streaming and stored event clips.

- **Privacy Zone**

  Set the areas you want to keep private on the camera view.

- **Format Storage**

  Delete all video recordings stored on the device.

- **Change Network**

  Change the Wi-Fi network the device connects to.

- **Device Name and Location**

  Change the device nickname and assign it to a room.

- **Camera Status LED**

  Turn the **Device LED** on or off (on by default).

- **Camera Speaker Volume**

  Set the device sound to **Lowest**, **Low**, **Medium**, **High**, or **Highest** (default is **Medium**).

- **Camera Microphone**

  Turn the **Microphone** on or off. When off, recording and two-way talk don't work (off by default).

- **Video Settings**

  – **Timestamp, Live Status, Bit Rate (kbps)**

    Choose what appears on screen, such as the Live badge, bit rate, and date and time.

  – **Flip Image**

    If the live video appears upside down, flip the view both vertically and horizontally.

  – **Anti-Flicker Settings**

Adjust the anti-flicker frequency to reduce image flicker caused by lighting. The default setting may vary by country.

- **Device Information**

  View the model name, serial number, connection type, and firmware version.

- **Notification Settings**

  Turn each notification on or off per device, including person, animal, vehicle, line crossing, and motion.

- **AI Detection Alert Exclusion Time**

  AI detection alerts are not sent during the set time.

> **Note**
>
> AI detection works normally.

Maintenance

Regular Maintenance

Clean your device regularly to maintain clear video quality and reliable performance.

Part	What to do
Camera Lens	Use a clean, dry microfiber cloth to remove dust, dirt, and debris.
Speaker and Microphone Holes	Use a clean, dry microfiber cloth to remove dust, dirt, and debris.
Ball Joint	Keep the rotating part for angle adjustment clean to prevent debris from getting inside.
Wi-Fi Signal	Make sure your device is within range of your Wi-Fi router. A weak signal may reduce video quality and cause connection issues.
Mounting Screws and Mounting Plate	Periodically check that the Mounting Screws and Mounting Plate are secure.
Power Cable	Inspect the power cable sheath for damage. If you find any damage, stop using the cable and replace it.

⚠ Caution

- Don't spray water or cleaning agents directly on the lens or the camera body. Don't touch the device with wet hands.
- Don't use sharp objects such as needles to remove debris from the **Speaker** or **Microphone** holes. This may damage the waterproof mesh.
- Try not to touch the **Camera Lens** with your fingers. Natural oils from your skin can make the video look blurry.

Firmware Update

Your device's software is updated to improve performance, fix issues, and add new features.

You can update the software automatically or manually.

Caution

Don't disconnect the power during the update. If the update fails, your device automatically returns to the previous version.

Note

Downgrading to a previous version isn't supported.

Troubleshooting

Before Calling for Service

If the camera does not work as expected, find the symptom below and check the possible causes before requesting service.

The Camera does not work or no image is displayed	
The product may not be receiving power, or the power connection may be loose.	• Check the power connection for your product type. • For plug-in models, reconnect the cable and the power adapter. • For wired models, check the circuit breaker and the power supply.
The Wi-Fi or internet connection may be unstable.	Check whether the camera is shown as online in the app, and check your router and internet connection.
The product may be outside its operating temperature range, or a temporary error may have occurred.	Let the product cool down completely in a well-ventilated place, then disconnect the power and connect it again.

The camera does not connect to Wi-Fi, disconnects frequently, or the video stream keeps pausing	
The distance between the camera and the router, physical obstacles, or wireless interference may be affecting the connection.	Install the camera closer to the router, and make sure there are no walls or metal objects between the camera and the router.
There may be a temporary problem with the router or the internet service.	Check whether other devices in your home can connect to the internet, then restart your router and modem.
The saved network information may no longer match your current network.	Use the network change feature in the app to set up the Wi-Fi connection again.

The product cannot be registered in the app	
Wi-Fi, Bluetooth, or NFC may be turned off on your smartphone, or the product may not be in Wi-Fi station mode.	• Turn on the required wireless functions. • To register the product manually, press and hold the **Option Button** for at least 3 seconds to switch it to Wi-Fi station mode.

The product cannot be registered in the app	
A temporary error may have occurred in the app or in the product.	Update the app to the latest version, restart your smartphone, router, and the product, and then try again.

The image is blurry or spots appear on the screen	
There may be dust, fingerprints, or water droplets on the lens surface.	• Wipe the lens with a soft, clean, dry, lint-free cloth. • Do not use alcohol, household cleaners, or paper towels.
Condensation or moisture may have formed inside the lens.	If droplets or fogging inside the lens remain after you wipe the lens surface, disconnect the power and contact the customer service center.
Direct sunlight or a bright light may be shining into the lens.	Adjust the angle of the camera, or install it where bright light does not shine directly on the lens.

The screen looks black or the image has a red tint	
The lens may be covered, or bright light may be shining directly into it.	Remove the protective film and any objects blocking the lens, and reposition the camera so that bright light does not shine directly into it.

The image freezes or lags	
The network connection may be unstable, or the temperature of the product may be too high.	Check the router connection, and let the product cool down completely in a well-ventilated place before using it again.

Night recording does not work or the camera does not switch between color and black-and-white	
The recording mode may be fixed, or the area around the light sensor or the IR LEDs may be blocked.	Set the recording mode to Auto in the app, and remove any dust, stickers, or objects around the sensor and the IR LEDs.

No sound comes from the camera or the sound is too low	
The product volume, the media volume of your smartphone, or the microphone setting in the app may be affecting the sound.	The sound may be low because of the product volume, the media volume of your smartphone, or the microphone setting in the app.
The speaker or the microphone hole may be blocked by foreign matter, or the network may be unstable.	Clean the area with a soft dry cloth or a brush, and check the network connection.

The product is hot or gives off a burning smell, or you feel an electric current on its surface	
A certain amount of heat can build up in direct sunlight or in an enclosed space.	If the product works normally and there is no smell or discoloration, make sure air can flow around it, keep it out of direct sunlight, and let it cool down completely.
A burning smell, smoke, discoloration, abnormal overheating, or an electric sensation may indicate a safety problem.	• Stop using the product immediately and disconnect the power. • Do not touch or disassemble the product. • Contact the customer service center or a qualified electrician to have the product inspected.

The product or the power connector is wet	
Water or moisture may have entered the power connector or the inside of the product.	• Disconnect the power immediately and do not turn the product back on. • Do not dry the product with a hot air blower and do not disassemble it. • Contact the customer service center.

Appendix

Product Specifications

Review the following specifications for detailed information on the product's hardware components and wireless connectivity.

Device	
Model	TWMC2W25*
IP Rating	IP65
Dimensions (W X H X D)	3.15 in X 6.77 in X 3.15 in (80 mm X 172 mm X 80 mm)
Weight	33.5 oz (0.95 kg)
Power Supply	DC 5.3 V, 3.3 A
Power Consumption	17.5 W
Operating Temperature	-4 °F to 122 °F (-20 °C to 50 °C)
Operating Humidity	0 – 90 %
Operating Altitude	Up to 9,842 ft (3,000 m)
Storage	eMMC

Adapter	
Input	100 – 240 V~
Output	DC 5.3 V, 3.3 A, USB Type-C

Warranty

Limited Warranty - USA
ARBITRATION NOTICE: THIS LIMITED WARRANTY CONTAINS AN ARBITRATION PROVISION THAT REQUIRES YOU AND LG ELECTRONICS ("LG") TO RESOLVE DISPUTES BY BINDING ARBITRATION INSTEAD OF IN COURT, UNLESS YOU CHOOSE TO OPT OUT. IN ARBITRATION, CLASS ACTIONS AND JURY TRIALS ARE NOT PERMITTED. PLEASE SEE THE SECTION TITLED "PROCEDURE FOR RESOLVING DISPUTES" BELOW. Should your LG Outdoor Cam Plug-In ("Product") fail due to a defect in material or workmanship under normal use, during the warranty period ("Warranty Period") set forth below, LG will, at its option either repair or replace the Product upon receipt of original Proof of Purchase ("POP"). This limited warranty is valid only to the original retail purchaser of the Product ("Customer" or "You") and applies only when purchased lawfully and used within the United States including U.S. Territories.

WARRANTY PERIOD:	HOW SERVICE IS HANDLED:
Parts and Labor: One (1) Year from date of delivery of original retail purchase, or from the date of delivery as per applicable law	The original sales invoice and delivery receipt specifying the Product and date of purchase and delivery are required to obtain warranty service. **For any service-related inquiries, including troubleshooting assistance,** visit www.lg.com or call 1-800-243-0000, or write to: ATTN: LG Customer Interactive Center 201 James Record Road SW Huntsville, Alabama 35824 **Shipping Costs** In-bound and out-bound shipping will be paid by LG during the Warranty Period.

NOTE

- Repaired or Replacement Products and parts are warranted for the remaining portion of the original warranty period or ninety (90) days, whichever is greater.
- Replacement Products and parts may be new, reconditioned, refurbished, or otherwise factory remanufactured.
- Replaced Product or part(s) will be the property of LG.
- If the original date of purchase cannot be verified, the warranty will begin on the 1st day of the manufacture month.

Disclaimer:

EXCEPT TO THE EXTENT PROHIBITED BY APPLICABLE LAW, ANY IMPLIED WARRANTY OF MERCHANTABILITY OR FITNESS FOR A PARTICULAR PURPOSE ON THE PRODUCT IS LIMITED IN DURATION TO THE DURATION OF THE ABOVE LIMITED WARRANTY. UNDER NO CIRCUMSTANCE SHALL LG BE LIABLE FOR ANY INCIDENTAL, SPECIAL, CONSEQUENTIAL OR PUNITIVE DAMAGES INCLUDING, WITHOUT LIMITATION, LOST GOODWILL, LOST REVENUE OR PROFITS, WORK STOPPAGE, PRODUCT FAILURE, IMPAIRMENT OF OTHER GOODS, LOSS OR CORRUPTION OF

PROGRAMMING OR DATA, LOSS OF USE, INJURY TO PERSONS OR PROPERTY ARISING OUT OF OR RELATED TO THE PRODUCT. LG'S TOTAL LIABILITY, IF ANY, SHALL NOT EXCEED THE PURCHASE PRICE PAID BY YOU FOR THE PRODUCT.

SOME STATES DO NOT ALLOW THE EXCLUSION OR LIMITATION OF INCIDENTAL OR CONSEQUENTIAL DAMAGES, OR ALLOW LIMITATIONS ON HOW LONG AN IMPLIED WARRANTY LASTS, SO THE ABOVE LIMITATIONS OR EXCLUSIONS MAY NOT APPLY TO YOU. THIS LIMITED WARRANTY GIVES YOU SPECIFIC LEGAL RIGHTS. YOU MAY ALSO HAVE OTHER RIGHTS THAT VARY FROM STATE TO STATE.

THIS LIMITED WARRANTY DOES NOT COVER:

- Service trips to deliver, pick up, or install, educate how to operate, correct wiring, or correct unauthorized repairs.
- Damage or loss to programs, data, or removable storage media.
- Damage or failure of the Product when used in other than normal intended use.
- Damage or failure of Product caused by incorrect electrical current or voltage (including power surge), power failures, power interruptions or inadequate electrical service, including incorrect or insufficient AC supply.
- Damage or failure of the Product resulting from improper set-up, adjustment, or operation of the Product contrary to the Product owner's manual.
- Damage or failure of the Product caused by accidents, pests and vermin, lightning, wind, fire, flood, or other acts of nature.
- Damage or failure of the Product caused by abnormal conditions or an environment where the temperature and humidity are not adequately controlled.
- Damage or failure of the Product resulting from misuse, abuse, unauthorized service, or improper maintenance.
- Damage or failure of the Product caused by the use of accessories, parts, consumable cleaning products, or services, that are not provided or approved by LG.
- Damage or failure of the Product caused by unauthorized alteration, modification or incorporation into any other product or system components.
- Damage or failure of the Product, or missing items to any Product sold "As Is", "With all Faults" or similar disclaimer.
- Damage or failure of the Product caused by transportation and/or handling, including scratches, dents, chips, and/or other damage to the finish of your Product, unless such damage results from a defect in materials or workmanship and is reported within one (1) week of delivery (Call: 1-800-243-0000).
- Products used for other than normal and proper household use (e.g., commercial or industrial use).
- Products with original serial numbers that have been removed, altered, or cannot be readily determined.
- Increases in utility cost and additional utility expenses.
- Replacement of any consumable parts including batteries.
- Minor imperfections that do not materially alter or affect functionality.

The cost of repair or replacement under the above excluded circumstances shall be borne by you.

ARBITRATION PROCEDURE FOR RESOLVING DISPUTES

ALL DISPUTES BETWEEN YOU AND LG ARISING OUT OF OR RELATING IN ANY WAY TO THIS LIMITED WARRANTY OR THE PRODUCT SHALL BE RESOLVED EXCLUSIVELY THROUGH BINDING ARBITRATION, AND NOT IN A COURT OF GENERAL JURISDICTION. BINDING ARBITRATION MEANS THAT YOU AND LG ARE EACH WAIVING THE RIGHT TO A JURY TRIAL AND TO BRING OR PARTICIPATE IN A CLASS ACTION.

Definitions. For the purposes of this section, references to "LG" mean LG Electronics U.S.A., Inc., its parents, subsidiaries and affiliates, and each of their officers, directors, employees, agents, beneficiaries, predecessors in interest, successors, assigns and suppliers; references to "dispute" or "claim" shall include any dispute, claim or controversy of any kind whatsoever (whether based in contract, tort, statute, regulation, ordinance, fraud, misrepresentation or any other legal or equitable theory) arising out of or relating in any way to the sale, condition or performance of the product or this Limited Warranty.

Notice of Dispute. In the event you intend to commence an arbitration proceeding, you must first notify LG in writing at least 30 days in advance of initiating the arbitration by sending a letter to LG at LG Electronics, USA, Inc. Attn: Legal Department-Arbitration 111 Sylvan Avenue, Englewood Cliffs, NJ 07632. You and LG agree to engage in good faith discussions in an attempt to amicably resolve your claim. The notice must provide your name, address, and telephone number; identify the product that is the subject of the claim; and describe the nature of the claim and the relief being sought. If you and LG are unable to resolve the dispute within 30 days, either party may proceed to file a claim for arbitration.

Agreement to Binding Arbitration and Class Action Waiver. Upon failure to resolve the dispute during the 30-day period after sending written notice to LG, you and LG agree to resolve any claims between us only by binding arbitration on an individual basis, unless you opt out as provided below. Any dispute between you and LG shall not be combined or consolidated with a dispute involving any other person's or entity's product or claim. More specifically, without limitation of the foregoing, any dispute between you and LG shall not under any circumstances proceed as part of a class or representative action. Instead of arbitration, either party may bring an individual action in small claims court, but that small claims court action may not be brought on a class or representative basis.

Arbitration Rules and Procedures. To begin arbitration of a claim, either you or LG must make a written demand for arbitration. The arbitration will be administered by the American Arbitration Association ("AAA") and will be conducted before a single arbitrator under the AAA's Consumer Arbitration Rules that are in effect at the time the arbitration is initiated (referred to as the "AAA Rules") and under the procedures set forth in this section. The AAA Rules are available online at www.adr.org/consumer. Send a copy of your written demand for arbitration, as well as a copy of this provision, to the AAA in the manner described in the AAA Rules. You must also send a copy of your written demand to LG at LG Electronics, USA, Inc. Attn: Legal Department-Arbitration 111 Sylvan Avenue, Englewood Cliffs, NJ 07632. If there is a conflict between the AAA Rules and the rules set

forth in this section, the rules set forth in this section will govern. This arbitration provision is governed by the Federal Arbitration Act. Judgment may be entered on the arbitrator's award in any court of competent jurisdiction. All issues are for the arbitrator to decide, except issues relating to the scope and enforceability of the arbitration provision and to the arbitrability of the dispute are for the court to decide. The arbitrator is bound by the terms of this provision.

Governing Law. The law of the state of your residence shall govern this Limited Warranty and any disputes between us except to the extent that such law is preempted by or inconsistent with applicable federal law.

Fees/Costs. You do not need to pay any fee to begin an arbitration. Upon receipt of your written demand for arbitration, LG will promptly pay all arbitration filing fees to the AAA unless you seek more than $25,000 in damages, in which case the payment of these fees will be governed by the AAA Rules. Except as otherwise provided for herein, LG will pay all AAA filing, administration, and arbitrator fees for any arbitration initiated in accordance with the AAA Rules and this arbitration provision. If You prevail in the arbitration, LG will pay your attorneys' fees and expenses as long as they are reasonable, by considering factors including, but not limited to, the purchase amount and claim amount. Notwithstanding the foregoing, if applicable law allows for an award of reasonable attorneys' fees and expenses, an arbitrator can award them to the same extent that a court would. If the arbitrator finds either the substance of your claim or the relief sought in the demand is frivolous or brought for an improper purpose (as measured by the standards set forth in Federal Rule of Civil Procedure 11(b)), then the payment of all arbitration fees will be governed by the AAA Rules. In such a situation, you agree to reimburse LG for all monies previously disbursed by it that are otherwise your obligation to pay under the AAA Rules. Except as otherwise provided for, LG waives any rights it may have to seek attorneys' fees and expenses from you if LG prevails in the arbitration.

Hearings and Location. If your claim is for $25,000 or less, you may choose to have the arbitration conducted solely on the basis of (1) documents submitted to the arbitrator, (2) through a telephonic hearing, or (3) by an in-person hearing as established by the AAA Rules. If your claim exceeds $25,000, the right to a hearing will be determined by the AAA Rules. Any in-person arbitration hearings will be held at a location within the federal judicial district in which you reside unless we both agree to another location or we agree to a telephonic arbitration.

Opt Out. You may opt out of this dispute resolution procedure. If you opt out, neither you nor LG can require the other to participate in an arbitration proceeding. To opt out, you must send notice to LG no later than 30 calendar days from the delivery/pick-up date of your purchase of the Product by either: (i) sending an e-mail to optout@lge.com, with the subject line: "Arbitration Opt Out" or (ii) calling 1-800-980-2973. You must include in the opt out e-mail or provide by telephone: (a) your name and address; (b) the date on which the product was delivered or picked up; (c) the product model name or model number; and (d) the serial number.

You may only opt out of the dispute resolution procedure in the manner described above (that is, by e-mail or telephone); no other form of notice will be effective to opt out of this dispute resolution procedure. Opting out of this dispute resolution procedure will not affect the coverage of the Limited

Warranty in any way, and you will continue to enjoy the full benefits of the Limited Warranty. If you keep this Product and do not opt out, then you accept all terms and conditions of the arbitration provision described above.

Any modifications or changes to this manual due to typographical errors or inaccuracies of stated information shall only be made by LG Electronics Inc.

LG Customer Information Center

For inquiries or comments,

visit **www.lg.com** or call:

1-800-243-0000 U.S.A.

Register your product Online!

www.lg.com

LG ELECTRONICS CANADA, INC. LIMITED WARRANTY - CANADA
ARBITRATION NOTICE: THIS LIMITED WARRANTY CONTAINS AN ARBITRATION PROVISION THAT REQUIRES YOU AND LG TO RESOLVE DISPUTES BY BINDING ARBITRATION INSTEAD OF IN COURT, UNLESS THE LAWS OF YOUR PROVINCE OR TERRITORY DO NOT PERMIT THAT, OR, IN OTHER JURISDICTIONS, IF YOU CHOOSE TO OPT OUT. FOR FURTHER CLARITY, THIS ARBITRATION PROVISION IS NOT APPLICABLE TO CONSUMERS RESIDING IN ONTARIO, BRITISH COLUMBIA OR QUÉBEC. IN ARBITRATION, CLASS ACTIONS AND JURY TRIALS ARE NOT PERMITTED. PLEASE SEE THE SECTION TITLED "PROCEDURE FOR RESOLVING DISPUTES" BELOW.
QUEBEC ONLY: LG stands behind its products and makes every reasonable effort to ensure its products can be maintained and repaired, as required. You may access the catalogue of available parts and services at https://www.lg.com/ca_en/support/. HOWEVER, LG IN NO WAY GUARANTEES AND MAKES NO REPRESENTATIONS REGARDING THE AVAILABILITY OF ANY SPECIFIC SPARE OR REPLACEMENT PART, REPAIR SERVICE OR INFORMATION OR INSTRUCTIONS FOR SUCH MAINTENANCE AT ANY TIME. LG EXPRESSLY DISCLAIMS ANY GUARANTEE, WARRANTY OR OBLIGATION IN RESPECT OF THAT AVAILABILITY.
Should your LG Outdoor Cam Plug-In ("Product") fail due to a defect in materials or workmanship under normal and proper use, during the warranty period set forth below, LG Electronics Canada, Inc. ("LGECI") will, at its option, repair, replace or pro rate the Product upon receipt of proof of the original retail purchase. This limited warranty is valid only to the original retail purchaser of the Product and applies only to a Product distributed, purchased from an authorized retailer and used within Canada, as determined at the sole discretion of LGECI.

WARRANTY PERIOD	
LG Outdoor Cam Plug-In	One (1) year from the date of original retail purchase Parts and Labor (internal/ functional parts only)

Note: If the original date of purchase can not be verified, the warranty will begin sixty (60) days from the date of manufacture.

- Replacement products and parts are warranted for the remaining portion of the original warranty period or ninety (90) days, whichever is greater.
- Replacement products and parts may be new, reconditioned, refurbished, or otherwise factory remanufactured, all at the sole discretion of LGECI.

- Proof of original retail purchase specifying the Product model and date of purchase is required to obtain warranty service under this Limited Warranty.

Disclaimer:

IF YOU ARE A CONSUMER SUBJECT TO QUÉBEC, BRITISH COLUMBIA OR ONTARIO'S CONSUMER PROTECTION ACT, THE EXCLUSION OF WARRANTIES CONTAINED IN THIS SECTION DOES NOT EXCLUDE OR LIMIT THE RIGHTS AND REMEDIES THAT YOU MAY HAVE UNDER SUCH ACT, INCLUDING THE RIGHT TO MAKE A CLAIM UNDER ANY OF THE STATUTORY WARRANTIES PROVIDED THEREUNDER.

LGECI'S SOLE LIABILITY IS LIMITED TO THE LIMITED WARRANTY SET OUT ABOVE, UNLESS SUCH LIMITATION IS PROHIBITED BY THE LAWS OF THE PROVINCE IN WHICH YOU RESIDE. EXCEPT AS EXPRESSLY PROVIDED ABOVE, OR IF OTHERWISE PROHIBITED BY THE LAW OF THE PROVINCE IN WHICH YOU RESIDE, LGECI DOES NOT MAKE ANY OTHER WARRANTIES OR CONDITIONS RESPECTING THE PRODUCT, AND HEREBY DISCLAIMS ALL OTHER WARRANTIES AND CONDITIONS RESPECTING THE PRODUCT, WHETHER EXPRESS OR IMPLIED, INCLUDING BUT NOT LIMITED TO, ANY IMPLIED WARRANTY OR CONDITION OF MERCHANTABILITY OR FITNESS FOR A PARTICULAR PURPOSE, AND NO REPRESENTATIONS SHALL BE BINDING ON LGECI. LGECI DOES NOT AUTHORIZE ANY PERSON TO CREATE OR ASSUME FOR IT ANY OTHER WARRANTY OBLIGATION OR LIABILITY IN CONNECTION WITH THE PRODUCT. TO THE EXTENT THAT ANY WARRANTY OR CONDITION IS IMPLIED BY LAW, IT IS LIMITED TO THE WARRANTY PERIOD SET OUT ABOVE. UNDER NO CIRCUMSTANCES SHALL LGECI, THE MANUFACTURER OR DISTRIBUTOR OF THE PRODUCT, BE LIABLE FOR ANY INCIDENTAL, CONSEQUENTIAL, SPECIAL, DIRECT, INDIRECT, PUNITIVE OR EXEMPLARY DAMAGES, INCLUDING, WITHOUT LIMITATION, LOSS OF GOODWILL, LOST PROFITS, LOSS OF ANTICIPATED PROFITS, LOST REVENUE, LOSS OF USE, OR ANY OTHER DAMAGE, WHETHER ARISING DIRECTLY OR INDIRECTLY FROM ANY CONTRACTUAL BREACH, FUNDAMENTAL BREACH, TORT OR OTHERWISE, OR FROM ANY ACTS OR OMISSIONS. LGECI'S TOTAL LIABILITY, IF ANY, SHALL NOT EXCEED THE PURCHASE PRICE PAID BY YOU FOR THE PRODUCT.

This Limited Warranty gives you specific legal rights. You may also have other rights that vary from province to province depending on applicable provincial laws. Any term of this Limited Warranty that negates or varies any implied condition or warranty under provincial law is severable where it conflicts with such provincial law without affecting the remainder of this warranty's terms.

THIS LIMITED WARRANTY DOES NOT COVER:

- Service trips to deliver, pick up, install, clean, or to correct wiring or unauthorized repairs.
- Service trips to educate how to assemble, operate, or maintain the Product.
- Damage or failure of the Product to perform during power failures and interrupted or inadequate electrical service.
- Damage or failure of the Product resulting from operating the Product in a corrosive atmosphere or contrary to the Product owner's manual.
- Damage or failure of the Product caused by accidents, pests and vermin, lightning, wind, fire, floods, acts of nature, or any other causes beyond the control of LG.
- Damage or failure of the Product caused by unauthorized modification or alteration, or if the Product is used for other than the intended purpose.
- Damage or failure of the Product caused by incorrect electrical current or voltage.
- Damage or failure of the Product caused by transportation, storage, and/or handling, including scratches, dents, chips, and/or other damage to the finish of the Product, unless such damage is reported within one (1) week of delivery.
- Damage or missing items to any display, open box, or discounted Product.
- Refurbished Product or any Product sold "As Is", "Where Is", "With all Faults", or similar disclaimer.
- Products with original serial numbers that have been removed, altered, or cannot be readily determined.
- Increases in utility costs and additional utility expenses.
- Any noises associated with normal operation.
- Products used for other than normal and proper household use (e.g., commercial or industrial use, offices, and recreational facilities or vehicles) or contrary to the Product owner's manual.
- Costs associated with removal and reinstallation of the Product for repairs.
- Replacement of batteries, filters, or any consumable parts.
- The removal and reinstallation of the Product if it is installed in an inaccessible location or is not installed in accordance with the Product owner's manual.
- Damage or failure of the Product resulting from misuse, abuse, improper installation, repair, or maintenance. Improper repair includes the use of parts not authorized by LG. Improper installation or maintenance includes installation or maintenance contrary to the Product owner's manual.
- Damage or failure of the Product caused by the use of parts, components, accessories, consumable cleaning products, detergents, chemicals, or any other products or services that are not authorized by LG.

All costs and expenses associated with the above excluded circumstances, listed under the heading, This Limited Warranty Does Not Cover, shall be borne by the consumer.

TO OBTAIN WARRANTY SERVICE AND ADDITIONAL INFORMATION, PLEASE CALL OR VISIT OUR WEBSITE: Call 1-888-542-2623 (7 A.M. to 12 A.M., 365 days a year) and select the appropriate option from the menu,

or visit our website at http://www.lg.com

PROCEDURE FOR RESOLVING DISPUTES:

EXCEPT WHERE PROHIBITED AT LAW (INCLUDING WITH RESPECT TO QUÉBEC, BRITISH COLUMBIA AND ONTARIO CONSUMERS), ALL DISPUTES BETWEEN YOU AND LG ARISING OUT OF OR RELATING IN ANY WAY TO THIS LIMITED WARRANTY OR THE PRODUCT SHALL BE RESOLVED EXCLUSIVELY THROUGH BINDING ARBITRATION, AND NOT IN A COURT OF GENERAL JURISDICTION. EXCEPT WHERE PROHIBITED AT LAW (INCLUDING WITH RESPECT TO QUÉBEC, BRITISH COLUMBIA AND ONTARIO CONSUMERS), YOU AND LG BOTH IRREVOCABLY AGREE TO WAIVE THE RIGHT TO A JURY TRIAL AND TO BRING OR PARTICIPATE IN A CLASS ACTION.

Definitions. For the purposes of this section, references to "LG" mean LG Electronics Canada, Inc., its parents, subsidiaries and affiliates, and each of their officers, directors, employees, agents, beneficiaries, predecessors in interest, successors, assigns and suppliers; references to "dispute" or "claim" shall include any dispute, claim or controversy of any kind whatsoever (whether based in contract, tort, statute, regulation, ordinance, fraud, misrepresentation or any other legal or equitable theory) arising out of or relating in any way to the sale, condition or performance of the product or this Limited Warranty.

Notice of Dispute. In the event you intend to commence an arbitration proceeding, you must first notify LG in writing at least 30 days in advance of initiating the arbitration by sending a letter to LGECI Legal Team at 20 Norelco Drive, North York, Ontario, Canada M9L 2X6 (the "Notice of Dispute"). You and LG agree to engage in good faith discussions in an attempt to amicably resolve your claim. The notice must provide your name, address, and telephone number; identify the product that is the subject of the claim; and describe the nature of the claim and the relief being sought. If you and LG are unable to resolve the dispute within 30 days of LG's receipt of the Notice of Dispute, the dispute shall be resolved by binding arbitration in accordance with the procedure set out herein. You and LG both agree that, during the arbitration proceeding, the terms (including any amount) of any settlement offer made by either you or LG will not be disclosed to the arbitrator until the arbitrator determines the dispute.

Agreement to Binding Arbitration and Class Action Waiver. Upon failure to resolve the dispute during the 30 day period after LG's receipt of the Notice of Dispute, you and LG agree to resolve any claims between you and LG only by binding arbitration on an individual basis, unless you opt out as provided below, or you reside in a jurisdiction that prevents full application of this clause in the circumstances of the claims at issue (in which case if you are a consumer, this clause will only apply if you expressly agree to the arbitration). To the extent permitted by applicable law, any dispute between you and LG shall not be combined or consolidated with a dispute involving any other person's or entity's product or claim. More specifically, without limitation of the foregoing, except to the extent such a prohibition is not permitted at law, any dispute between you and LG shall not under any circumstances proceed as part of a class or representative action. Instead of arbitration, either party may bring an individual action in small claims court, but that small claims court action may not be brought on a class or representative basis except to the extent this prohibition is not permitted at law in your province or territory of jurisdiction as it relates to the claims at issue between you and LG. This does not apply to consumers in Ontario, British Columbia and Québec. In accordance with

provincial legislation, the consumer and LG may agree to resolve the dispute using any procedure available, including commencing the action before the competent courts of those provinces.

Arbitration Rules and Procedures. To begin arbitration of a claim, either you or LG must make a written demand for arbitration. The arbitration will be private and confidential, and conducted on a simplified and expedited basis before a single arbitrator chosen by the parties under the provincial or territorial commercial arbitration law and rules of the province or territory of your residence. You must also send a copy of your written demand to LG at LG Electronics, Canada, Inc., Attn: Legal Department- Arbitration, 20 Norelco Drive, North York, Ontario M9L 2X6. This arbitration provision is governed by your applicable provincial or territorial commercial arbitration legislation. For consumers in Ontario, British Columbia and Québec, the applicable arbitration legislation only applies if consumers agree to submit the dispute to arbitration. Judgment may be entered on the arbitrator's award in any court of competent jurisdiction. All issues are for the arbitrator to decide, except that, issues relating to the scope and enforceability of the arbitration provision and to the arbitrability of the dispute are for the court to decide. The arbitrator is bound by the terms of this provision.

Governing Law. The law of the province or territory of your purchase shall govern this Limited Warranty and any disputes between you and LG except to the extent that such law is preempted by or inconsistent with applicable federal or provincial/territorial law. Should arbitration not be permitted for any claim, action, dispute or controversy between you and LG, you and LG attorn to the exclusive jurisdiction of the courts of the province or territory of your purchase for the resolution of the claim, action, dispute or controversy between you and LG.

Fees/Costs. You do not need to pay any fee to begin an arbitration. Upon receipt of your written demand for arbitration, LG will promptly pay all arbitration filing fees unless you seek more than $25,000 in damages, in which case the payment of these fees will be governed by the applicable arbitration rules. Except as otherwise provided for herein, LG will pay all filing, administration and arbitrator fees for any arbitration initiated in accordance with the applicable arbitration rules and this arbitration provision. If you prevail in the arbitration, LG will pay your attorneys' fees and expenses as long as they are reasonable, by considering factors including, but not limited to, the purchase amount and claim amount. Notwithstanding the foregoing, if applicable law allows for an award of reasonable attorneys' fees and expenses, an arbitrator can award them to the same extent that a court would. If the arbitrator finds either the substance of your claim or the relief sought in the demand is frivolous or brought for an improper purpose (as measured by the applicable laws), then the payment of all arbitration fees will be governed by the applicable arbitration rules. In such a situation, you agree to reimburse LG for all monies previously disbursed by it that are otherwise your obligation to pay under the applicable arbitration rules. Except as otherwise provided for, LG waives any rights it may have to seek attorneys' fees and expenses from you if LG prevails in the arbitration.

Hearings and Location. If your claim is for $25,000 or less, you may choose to have the arbitration conducted solely (1) on the basis of documents submitted to the arbitrator, (2) through a telephonic hearing, or (3) by an in-person hearing as established by the applicable arbitration rules. If your claim exceeds $25,000, the right to a hearing will be determined by the applicable arbitration rules. Any in-person arbitration hearings will be held at the nearest, most mutually-convenient arbitration location

available within the province or territory in which you reside unless you and LG both agree to another location or agree to a telephonic arbitration.

Severability and Waiver. If any portion of this Limited Warranty (including these arbitration procedures) is unenforceable, the remaining provisions will continue in full force and effect to the maximum extent permitted by applicable law. Should LG fail to enforce strict performance of any provision of this Limited Warranty (including these arbitration procedures), it does not mean that LG intends to waive or has waived any provision or part of this Limited Warranty.

Opt Out. The arbitration provision requires you and LG to resolve disputes by binding arbitration instead of court, unless the laws of your province or territory do not permit that, or, in other jurisdictions, if you choose to opt out. The arbitration provision does not apply to consumers in Ontario, British Columbia and Québec.

For individuals that fall within the binding arbitration provisions, you may opt out of this dispute resolution procedure. If you opt out, neither you nor LG can require the other to participate in an arbitration proceeding. To opt out, you must send notice to LG no later than 30 calendar days from the date of the first consumer purchaser's purchase of the product by either (i) sending an e-mail to optout@lge.com, with the subject line: "Arbitration Opt Out;" or (ii) calling 1-800-980-2973. You must include in the opt out e-mail or provide by telephone: (a) your name and address; (b) the date on which the product was purchased; (c) the product model name or model number; and (d) the serial number (the serial number can be found (i) on the product; or (ii) online by accessing **https://www.lg.com/ca_en/findmodel_serial/**).

In the event that you "Opt Out", the law of the province or territory of your residence shall govern this Limited Warranty and any disputes between you and LG except to the extent that such law is preempted by or inconsistent with applicable federal or provincial/territorial law. Should arbitration not be permitted for any claim, action, dispute or controversy between you and LG, you and LG agree to attorn to the exclusive jurisdiction of the courts of the province or territory of your residence for the resolution of the claim, action, dispute or controversy between you and LG.

You may only opt out of the dispute resolution procedure in the manner described above (that is, by e-mail or telephone); no other form of notice will be effective to opt out of this dispute resolution procedure. Opting out of this dispute resolution procedure will not affect the coverage of the Limited Warranty in any way, and you will continue to enjoy the full benefits of the Limited Warranty. If you keep this product and do not opt out, then you accept all terms and conditions of the arbitration provision described above.

Conflict of Terms. In the event of a conflict or inconsistency between the terms of this Limited Warranty and the End User License Agreement ("EULA") in regards to dispute resolution, the terms of this Limited Warranty shall control and govern the rights and obligations of the parties and shall take precedence over the EULA.

LG Customer Information Center

For inquiries or comments,

visit **www.lg.com** or call:

1-888-542-2623 CANADA

Register your product Online!

www.lg.com

Trademarks and Licenses

Wi-Fi



Wi-Fi® is a registered trademark of Wi-Fi Alliance®.

Bluetooth®



The Bluetooth® word mark and logos are registered trademarks owned by Bluetooth SIG, Inc. and any use of such marks by Lumi United Technology Co., Ltd is under license. Other trademarks and trade names are those of their respective owners.

Open Source Software Notice Information

To obtain the source code that is contained in this product, under GPL, LGPL, MPL, and other open source licenses that have the obligation to disclose source code, and to access all referred license terms, copyright notices and other relevant documents, please visit **https://opensource.lge.com.**

LG Electronics will also provide open source code to you for a charge covering the cost of performing such distribution upon email request to **opensource@lge.com.**

This offer is valid to anyone in receipt of this information for a period of three years after our last shipment of this product.