OWNER'S MANUAL

LG SMART DEADBOLT LOCK

Read this owner's manual thoroughly before operating the product.
Keep it handy for reference at all times.

www.lg.com

Copyright © 2026 LG Electronics. All Rights Reserved.

Table of Contents

Safety

Important Safety Instructions . . . 5
- Read All Instructions Before Use . . . 5
- Safety Information . . . 6

Regulatory Information . . . 8

Product Overview

Product Features . . . 10
- Exterior Unit . . . 10
- Interior Unit . . . 12

Display and Device LED Status . . . 14
- Touch Operation Area . . . 14
- Device LED . . . 14

Installation

What's in the Box . . . 15
- Part List . . . 15

Step-by-Step Video Guides . . . 17
- Tools You Need . . . 17
- Replacing an Existing Door Lock . . . 18
- Insert Deadbolt . . . 19
- Install Swivel Pin . . . 21
- Install Exterior Unit . . . 22
- Level & Fasten Mounting Plate . . . 23
- Loose Mounting Plate . . . 25
- Secure the Mounting Plate . . . 26
- Install Interior Unit . . . 27
- Insert Batteries . . . 29

Connection

Before You Begin . . . 31
System Requirements . . . 31
Using a Home Hub . . . 32
Connecting via Apple Home App . . . 33
Connecting via NFC . . . 33
Connecting Manually . . . 35
Connecting via LG ThinQ App (US only) . . . 37

Operation

Managing Authentication . . . 39
Master PIN . . . 40
PIN Code . . . 41
Operational Scenarios . . . 44
Apple Home Key (UWB) . . . 44
Apple Home Key (NFC) . . . 44
PIN Code . . . 45
Mobile App Unlock . . . 46
Mechanical Key . . . 46
General Configuration . . . 47
Auto/Manual Locking Settings . . . 47
Door Sensor . . . 47
Bluetooth Pairing (Matter Device Connection) . . . 48
Device Alerts and Alarms . . . 50
Tamper Alarm . . . 50
Impact Alarm . . . 50
Low Battery Alarm . . . 50
Door Ajar Alarm . . . 51
Factory Reset . . . 52
Apple Home Application Features . . . 53
LG ThinQ Application Features (US only) . . . 56

Maintenance

Regular Maintenance 59
Replacing the Batteries 60
Firmware Update 63

Troubleshooting

Before Calling for Service 64

Appendix

Product Specifications 66
Warranty 67
Trademarks and Licenses 80
Bluetooth® 80
Open Source Software Notice Information 81

Safety

Important Safety Instructions

Read All Instructions Before Use

Safety Messages

Your safety and the safety of others are very important.

We have provided many important safety messages in this manual and on your appliance. Always read and follow all safety messages.



This is the safety alert symbol.

This symbol alerts you to potential hazards that can kill or injure you and others.

All safety messages will follow the safety alert symbol and either the word WARNING or CAUTION.

These words mean:



WARNING

You may be killed or seriously injured if you do not follow instructions.



CAUTION

You may be injured or cause damage to the product if you do not follow instructions.

All safety messages will tell you what the potential hazard is, tell you how to reduce the chance of injury, and tell you what may happen if the instructions are not followed.

Safety Information

⚠ WARNING

You may be killed or seriously injured if you do not follow instructions.

- The interior assembly is designed for indoor use only. Do not expose the inside components to direct rain, moisture, or extreme temperatures.
- Do not modify the door frame or lock body. Do not insert objects into the deadbolt hole other than the bolt itself. Modifications can compromise the security and structural integrity of the lock.
- Always keep a physical backup key outside your home (such as in your car or with a trusted neighbor). Electronic failure, dead batteries, or system malfunctions can prevent digital access in an emergency.
- Protect your Master PIN Code. Do not share your Master PIN with anyone. Regularly check the access logs via the mobile app to monitor for unauthorized activity.

⚠ CAUTION

You may be injured or cause damage to the product if you do not follow instructions.

- This lock is designed for 1-9/16 in (40 mm) to 2 in (51 mm) thick doors only. Please verify your door dimensions prior to installation. Ensure your door meets the installation requirements before installing.
- Do not use a power drill or electric screwdriver. Excessive torque can strip screw threads, crack the mounting plate, or damage the internal motor. Hand-tighten all screws.
- Failure to drill holes according to the exact specifications on the installation template may result in improper installation or product malfunction.
- Ensure your door and deadbolt are properly aligned. The deadbolt should extend and retract freely without pushing or pulling the door. Excessive friction will significantly reduce battery life and may cause motor failure.
- Use only new, high-quality, non-rechargeable alkaline batteries. Do not mix old and new batteries. Doing so may cause the batteries to leak.
- Do not paint the lock. If painting the door, remove the lock hardware first. Paint can clog buttons, sensors, and mechanical parts.
- Clean the lockset with a soft, damp cloth only. Do not use abrasives, harsh chemicals, or solvents (like alcohol or benzene), as they may damage the protective finish and sensors.
- Keep the door open during installation to prevent being accidentally locked out before the setup is complete.
- Do not subject the product to shocks or drop it.
- Remove the battery if the product will not be used for an extended period of time.

- Under abusive conditions, liquid may be ejected from the battery. If this happens, avoid contact. If contact accidentally occurs, flush with water. If liquid contacts eyes, additionally seek medical help. Liquid ejected from the battery may cause irritation or burns.

Regulatory Information

FCC Notice

This equipment has been tested and found to comply with the limits for a Class B digital device, pursuant to Part 15 of the FCC Rules. These limits are designed to provide reasonable protection against harmful interference in a residential installation. This equipment generates, uses, and can radiate radio frequency energy and, if not installed and used in accordance with the instructions, may cause harmful interference to radio communications. However, there is no guarantee that interference will not occur in a particular installation. If this equipment does cause harmful interference to radio or television reception, which can be determined by turning the equipment off and on, the user is encouraged to try to correct the interference by one or more of the following measures:

- Reorient or relocate the receiving antenna.
- Increase the separation between the equipment and the receiver.
- Connect the equipment to an outlet on a circuit different from that to which the receiver is connected.
- Consult the dealer or an experienced radio/TV technician for help.

Supplier's Declaration of Conformity

47 CFR §2.1077 Compliance Information

Trade Name: LG

Responsible Party: LG Electronics USA, Inc.

Address: 111 Sylvan Avenue, North Building, Englewood Cliffs, NJ 07632

Email: lg.environmental@lge.com

This device complies with part 15 of the FCC Rules. Operation is subject to the following two conditions:

(1) This device may not cause harmful interference and

(2) This device must accept any interference received, including interference that may cause undesired operation.

Any changes or modifications in construction of this device which are not expressly approved by the party responsible for compliance could void the user's authority to operate the equipment.

FCC RF Radiation Exposure Statement

This equipment complies with FCC radiation exposure limits set forth for an uncontrolled environment. This transmitter must not be co-located or operating in conjunction with any other antenna or transmitter.

This equipment should be installed and operated with a minimum distance of 20 cm (7.8 inches) between the antenna and your body. Users must follow the specific operating instructions for satisfying RF exposure compliance.

UWB Instruction

This equipment may not be employed to operate toys. Operation on board an aircraft, a ship, or a satellite is prohibited.

Industry Canada Statement

This device contains licence-exempt transmitter(s)/receiver(s) that comply with Innovation, Science and Economic Development Canada's licence-exempt RSS(s).

Operation is subject to the following two conditions:

(1) This device may not cause interference.

(2) This device must accept any interference, including interference that may cause undesired operation of the device.

CAN ICES (B) / NMB (B)

IC Radiation Exposure Statement

This equipment complies with IC radiation exposure limits set forth for an uncontrolled environment. This equipment should be installed and operated with a minimum distance of 20 cm (7.8 inches) between the antenna and your body.

NOTE: THE MANUFACTURER IS NOT RESPONSIBLE FOR ANY RADIO OR TV INTERFERENCE CAUSED BY UNAUTHORIZED MODIFICATIONS TO THIS EQUIPMENT. SUCH MODIFICATIONS COULD VOID THE USER'S AUTHORITY TO OPERATE THE EQUIPMENT.

Security Notice

When the device is powered on for the first time, or after a factory reset, it may temporarily become available for Matter setup.

To help prevent unintended access:

- Complete the Matter setup as soon as possible.
- Verify that the device has been added to your intended Matter network.
- Do not leave the device unattended during setup.
- Keep the Matter QR code and setup credentials private and do not share them with unauthorized persons.
- Failure to follow these precautions could allow the device to be added to an unintended Matter network.

Product Overview

Product Features

Review this section to understand each component on your device and its function.

Exterior Unit

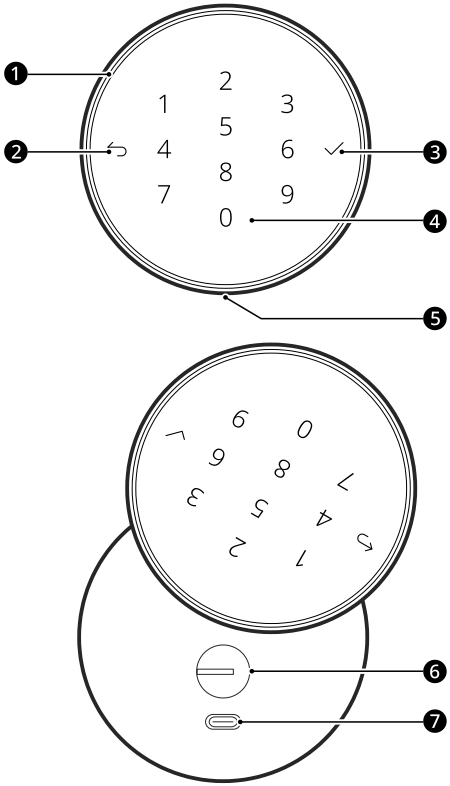

1 Device LED

Indicates status and notifications through lighting.

See *Device LED*.

2 **Button**

Returns to the previous step or cancels the current operation.

3 **Button**

Confirms the input and proceeds to the next step.

4 **Number Keypad**

Enters PIN codes to lock or unlock the door.

See *PIN Code* .

5 **Speaker**

Location from which audio is emitted.

6 **Mechanical Keyhole**

Keyhole for manual locking or unlocking.

See *Mechanical Key* .

7 **Emergency Power (USB Type-C)**

USB-C port for temporary power when the battery is depleted.

See *Replacing the Batteries* .

Note

Illustrations in this manual may differ from the actual product.

Interior Unit

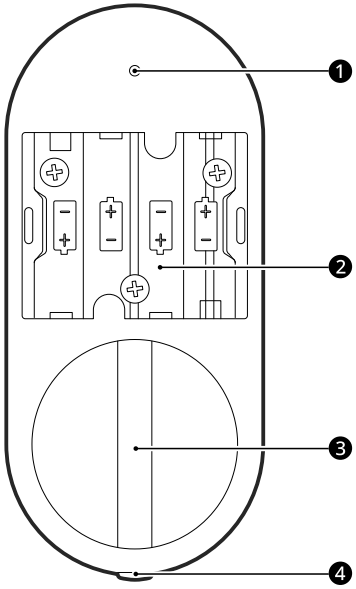

1 **Option Button**

Press and hold this button to activate advanced modes:

- Under 3 seconds: Accessing Master Mode
- 3 – 10 seconds: Bluetooth Pairing
- 10 – 20 seconds: Factory Reset
- More than 20 seconds: Exit current procedure

2 **Battery Compartment**

Holds 4 AA batteries.

See *Replacing the Batteries* .

3 **Manual Turnpiece**

Turn to manually lock or unlock the door from the inside.

4 **Battery Cover Release Button**

Press the **Battery Cover Release Button** to slide off the battery cover.

Note

Illustrations in this manual may differ from the actual product.

Display and Device LED Status

Touch Operation Area

To activate and use the keypad, touch it with one or more fingers.

Device LED

The **Device LED** on the exterior keypad indicates the current device status. Refer to the table below to understand each pattern.

LED Color	LED Pattern	Keypad Pattern	Action
	Down (fills top to bottom)	–	Deadbolt unlocked
	Clockwise	–	Setting completed
	Left (fills right to left)	–	PIN code authentication success
	Down (fills top to bottom)	–	NFC (Home Key) authentication success
	Up (fills bottom to top)	–	UWB authentication success
	Blink (blinks once, then stays on)	–	App unlock/lock
	Slow Clockwise	–	Pairing Standby (15 minutes)
	Blinking × 3	–	Error
	Blinking (first 5 sec)	Countdown blinking (6–1)	Security lockout (5 incorrect attempts, 1 min lock)
	Blinking	–	Matter device connecting
	Blinking	–	Factory reset in progress
	Clockwise	–	Matter device connection complete
	Down	All	Low battery alert (30 % or less)

Installation

What's in the Box

Part List

Verify that all the parts listed below are included in the package. If any of the parts are missing or damaged, contact the retailer or customer support immediately.

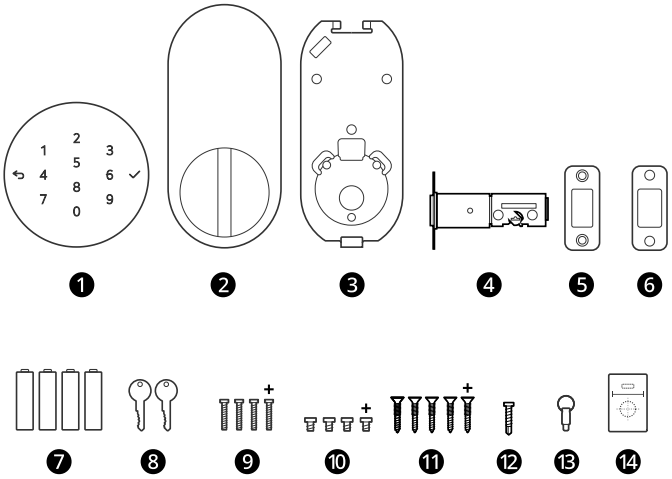

+ : Spare

1. Exterior Unit
2. Interior Unit
3. Mounting Plate
4. Deadbolt
5. Strike Box
6. Strike Plate
7. Batteries
8. Mechanical Keys
9. Mounting Plate Screws (M5 × 26.5)
10. Interior Unit Screws (M4 × 6)
11. Deadbolt & Strike Box Screws (#8-32/ST4 × 25)
12. Fixing Screw (ST4.2 × 19)
13. Swivel Pin
14. Installation Template

Note

- Check that all parts are included before installation.
- Illustrations may differ from the actual product.
- Door preparation (drilling) may require tools not included in the package.

Step-by-Step Video Guides

To ensure a correct installation, follow the steps in order.

Read all warnings, cautions, and notes carefully before you begin.

Plan for this installation to take about 40 minutes.

⚠ Caution

Use Manual Tools Only: To prevent damage to the device or stripping of the screw threads, do not use a power screwdriver or drill for assembly. Use a manual Phillips screwdriver instead.

Note

Check the Wi-Fi signal strength at the installation location before installing the product. If the signal is weak or connectivity issues occur between the product and app, a Wi-Fi extender may be required.

Tools You Need

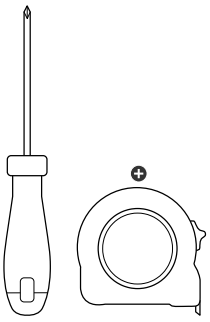

⊕ : Optional

Tools You Need
Phillips Screwdriver
Ruler (Optional)

Replacing an Existing Door Lock

Are you installing the door lock in place of an existing lock?

- **Yes**: Remove the old door lock. Before installation, verify that your door meets the compatibility requirements below. Your door lock is designed for standard residential doors with a bored-door preparation.
- **No**: This requires a professional installer. Hire a qualified professional installer to drill the required openings in the door.

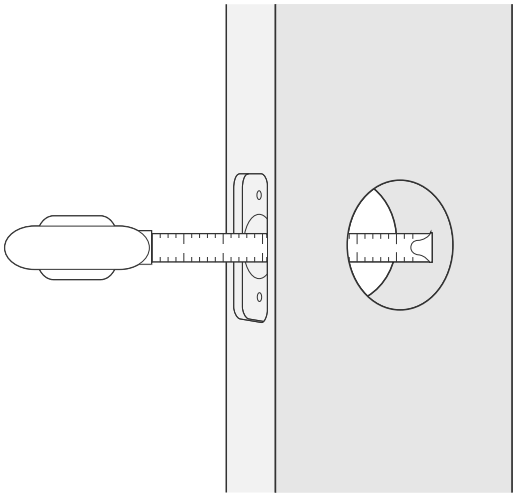

Door Compatibility	
Door Thickness	1-9/16 in – 2 in (40 – 51 mm)
Cross Bore	2-1/8 in (54 mm)
Edge Bore	1 in (25.4 mm)
Backset	Adjustable 2-3/8 in or 2-3/4 in (60 mm or 70 mm)

Insert Deadbolt

Note

- If the backset (distance from the door edge to the center of the bore hole) is 2-3/8 in (60 mm), use the **Deadbolt** without extending it.
- If the backset is 2-3/4 in (70 mm), rotate the **Deadbolt** to extend it before installation.

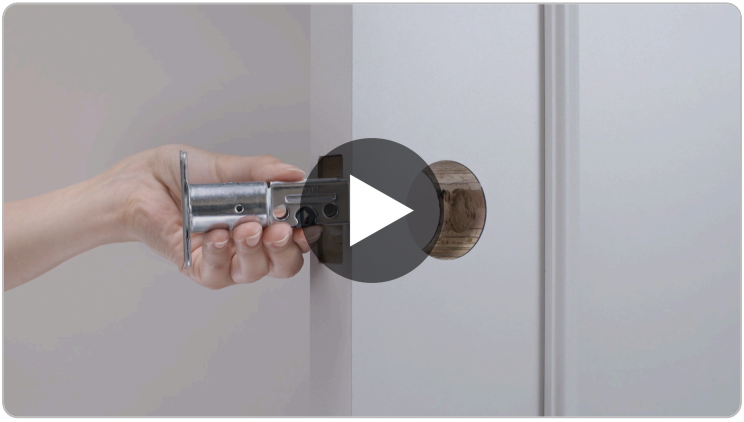

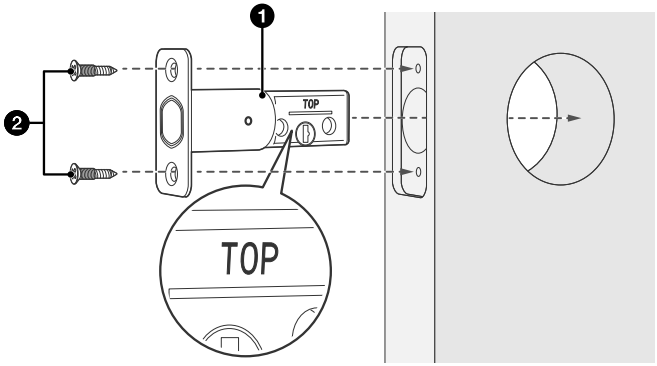

❷ : #8-32/ST4 × 25

1. Insert the **Deadbolt** ❶ into the hole in the edge of the door.
2. Make sure the **"TOP"** marking on the **Deadbolt** faces up.
3. Secure the **Deadbolt** with the provided 2 **Deadbolt & Strike Box Screws** ❷.

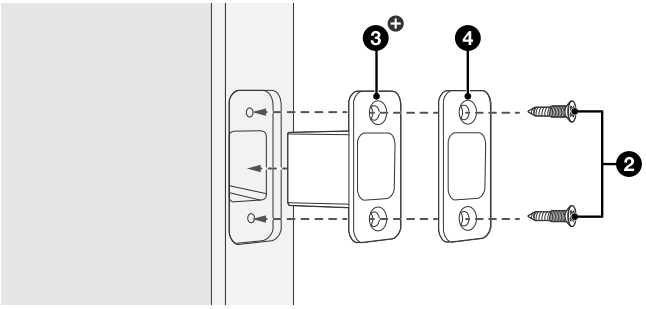

⊕ : Optional
❷ : #8-32/ST4 × 25

4. Insert the **Strike Box** ❸ into the hole in the door frame, and then place the **Strike Plate** ❹ over it.
5. Secure the **Strike Plate** with the provided 2 **Deadbolt & Strike Box Screws** ❷.

Install Swivel Pin

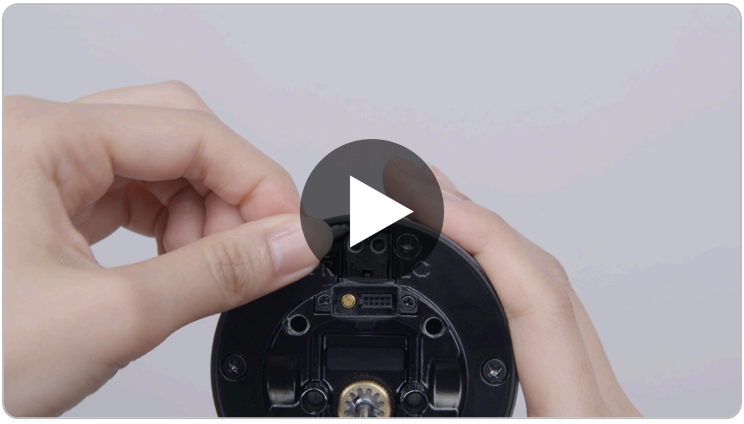

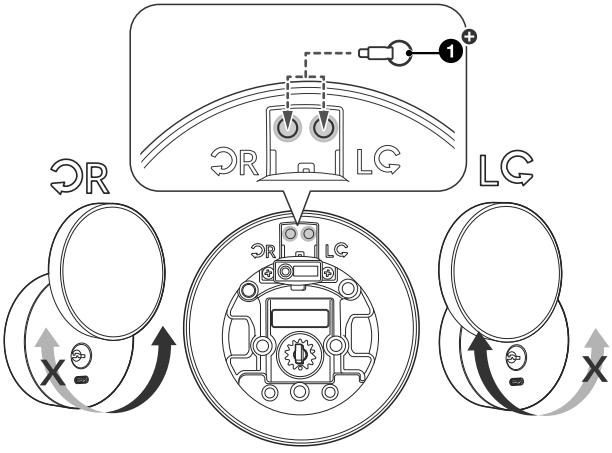

⊕ : Optional

The **Swivel Pin** limits the keypad to one direction and prevents it from hitting a nearby surface.

1. With the **Exterior Unit** aligned, rotate the keypad to check whether it touches the wall or another nearby surface.
2. Insert the **Swivel Pin** ❶ into the hole on the side where you want to limit the keypad's rotation.
3. Secure the ring to the hook.

Install Exterior Unit



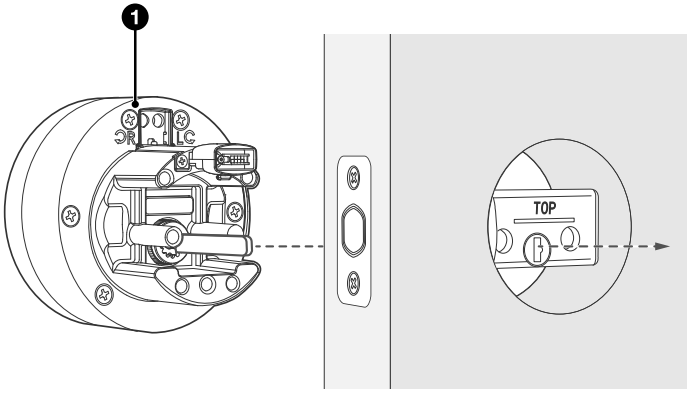

1. From the outside of the door, insert the shaft into the opening in the **Deadbolt**.
2. Align the **Exterior Unit** ❶ with the edge of the door.
3. Make sure the gasket isn't pinched.

Note

Verify that the **Deadbolt** is in the closed position and the shaft opening is vertical before installing the **Exterior Unit**.

Level & Fasten Mounting Plate

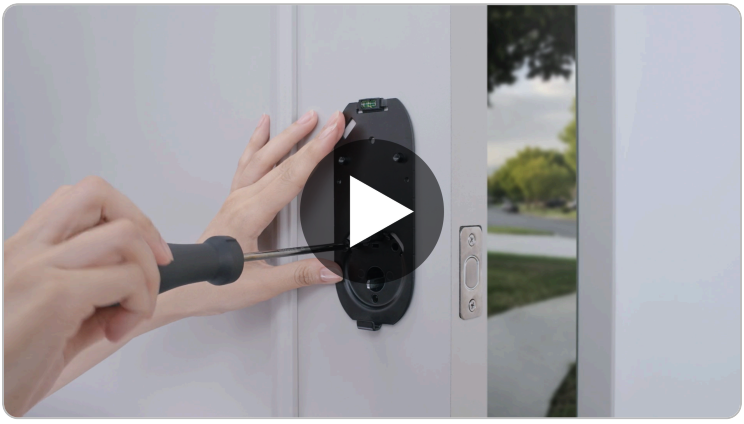

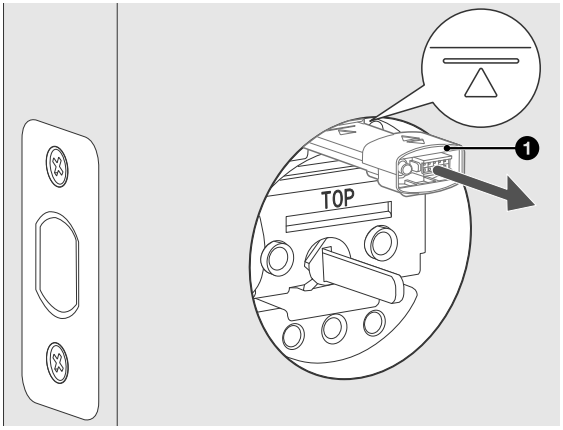

1. Pull the **Slide Connector** ❶ out completely.

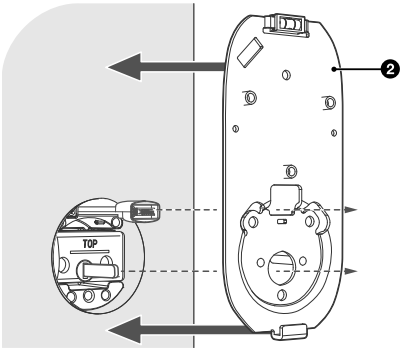

2. Pass the **Slide Connector** through the opening in the **Mounting Plate** ❷.
3. Align the two pins on the **Mounting Plate** with the holes in the **Deadbolt**.
4. Attach the **Mounting Plate** to the **Deadbolt**.
5. Place a level along the top edge of the **Mounting Plate**.
6. Adjust the **Mounting Plate** until it's horizontal.

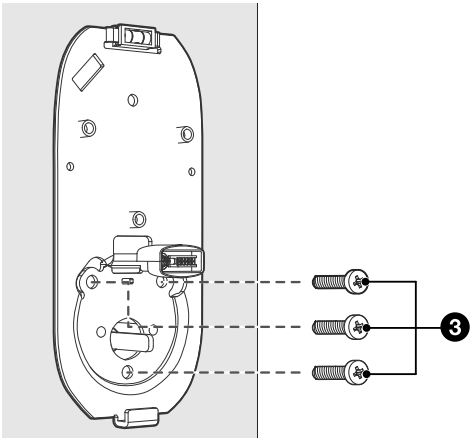

❸ : M5 × 26.5

7. Secure the **Mounting Plate** to the **Exterior Unit** with the three **Mounting Plate Screws** ❸.

Loose Mounting Plate

Gently move the **Mounting Plate** to check whether it's loose.

Yes **No**

Secure the Mounting Plate

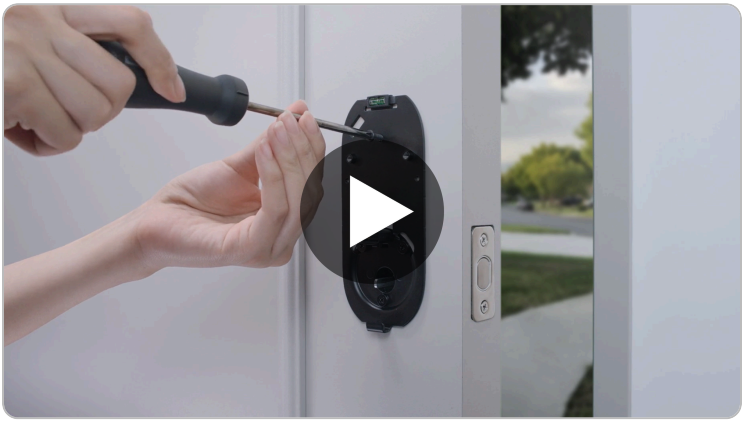

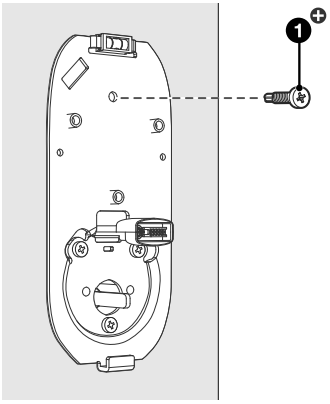

⊕ : Optional
❶ : ST4.2 × 19

1. Insert the optional **Fixing Screw** ❶ into the top hole of the **Mounting Plate**.
2. Secure the screw until the **Mounting Plate** no longer wobbles.

Install Interior Unit



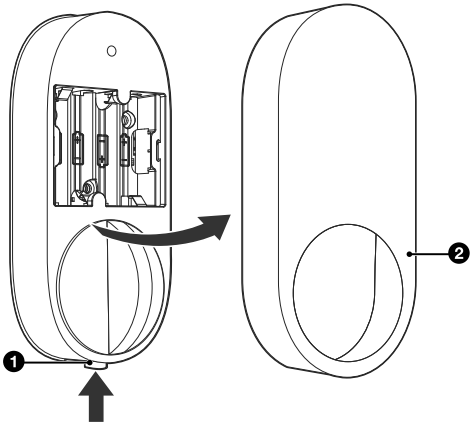

1. Press and hold the **Battery Cover Release Button** ❶ at the bottom of the **Interior Unit** to remove the **Battery Cover**.
2. Remove the **Battery Cover** ❷.

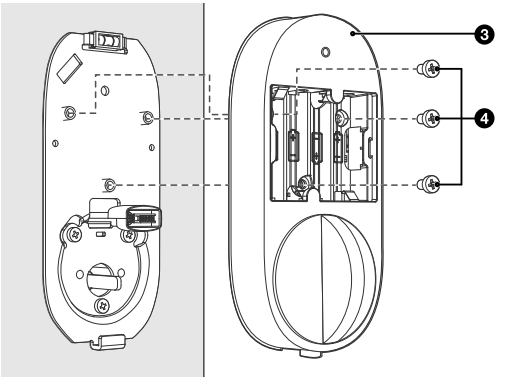

4 : M4 × 6

3. Align the **Slide Connector** with the **Interior Unit** 3 connection port, and then attach it securely.
4. Secure it with 3 **Interior Unit Screws** 4 through the holes in the **Battery Compartment**.

Insert Batteries

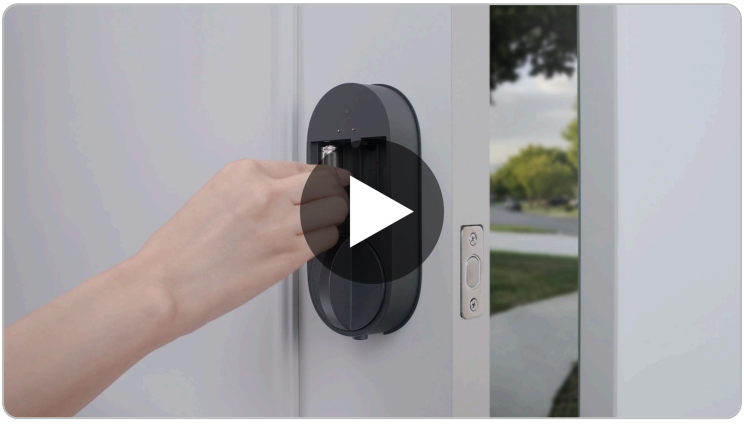

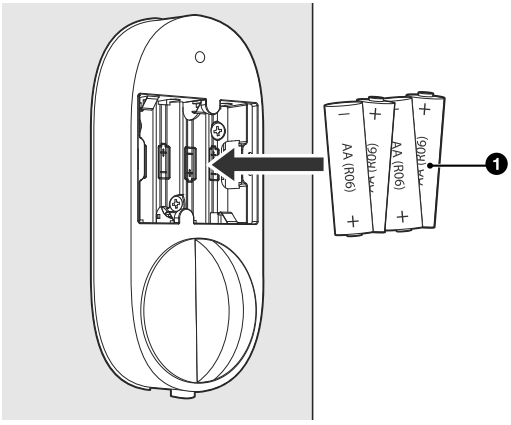

1. Insert the four **Batteries** ❶ according to the polarity markings in the battery compartment.
2. Wait for the status light on the **Exterior Unit** to turn on and for a sound.

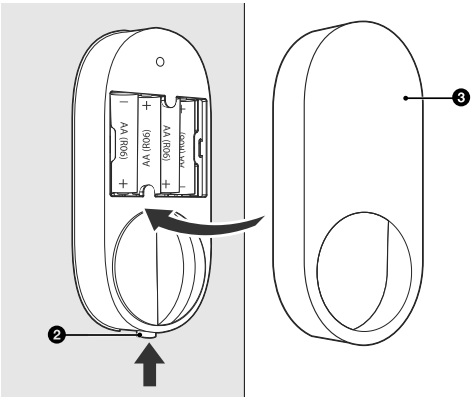

3. Press and hold the **Battery Cover Release Button** ❷ at the bottom of the **Interior Unit**.
4. Attach the **Battery Cover** ❸.

See *Replacing the Batteries* for future battery replacement instructions.

Connection

Before You Begin

Connection methods vary depending on your phone OS and the app you use. Refer to the corresponding section below to connect your device correctly.

Before you begin, make sure your phone, network, and any other required devices meet the requirements listed in this section.

Note

- Keep the device, phone, and hub within close range of each other during setup.
- The NFC antenna location varies by phone manufacturer and model. If the device isn't recognized, try moving the top or center of your phone near the NFC label.
- Check the Wi-Fi signal strength at the installation location before installing the product. If the signal is weak or connectivity issues occur between the product and app, a Wi-Fi extender may be required.

System Requirements

To connect and use your device, your phone must run a compatible operating system (OS) version and meet the following requirements.

- iOS/iPadOS: To use Matter-certified accessories, an iPhone or iPad running **iOS 16.5 or later** is recommended (minimum requirement: iOS 16.1).
- Android: To use Matter-certified accessories, a phone running **Android 13.0 or later** is recommended (minimum requirement: Android 8.1 with Google Play Services v22.48.14 or later).
- Operating System: For a stable experience, use a phone running **iOS 15.0 or later** or **Android 10.0 or later**.
- Matter Hub: A compatible Matter controller (such as Apple HomePod mini) is required for remote control and automations.
- Bluetooth: Turn on Bluetooth on your phone before connecting.

Using a Home Hub

A compatible home hub **(such as a HomePod or Apple TV 4K running tvOS 16.1 or later)** acts as the brain of your smart home, enabling remote control and automations by securely connecting your devices to the network.

Features of Using a Hub

- **Remote Access**: Control your device and check its status from anywhere in the app.
- **Real-Time Notifications**: Receive instant alerts on your phone when the device is operated or an event occurs.
- **Automations**: Connecting multiple IoT devices allows you to create customized scenes and routines tailored to specific situations or times of day (for example, turning on the lights when you arrive home).

Note

- The hub must remain powered on and connected to a stable Wi-Fi network at all times.
- For the best connection, keep a clear line of sight between the device and your always-on hub.
- A Matter-compatible Thread Border Router hub is required to connect the lock to the app and use smart features, including remote control, automations, and settings customization.

Connecting via Apple Home App

You can connect your device using the **Apple Home** app. Use **NFC** for the fastest setup. It works even when the device is powered off.

Note

- A Matter-compatible Thread Border Router hub is required to connect the lock to the app and use smart features, including remote control, automations, and settings customization.
- Make sure your **Matter Hub** is powered on and connected to the internet.
- Your iPhone and hub must be on the same Wi-Fi network.
- Keep the device, iPhone, and hub within close range of each other during setup.

Connecting via NFC

Follow the steps below to connect your device using NFC.

1. Hold the iPhone's NFC antenna near the NFC symbol on the product. If a setup card appears automatically, tap **Set Up**.

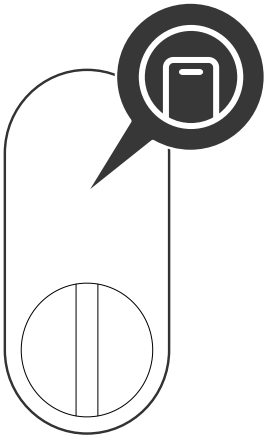

2. Assign a room and a name for the device. The device is added to the Home app and appears as **Connect to Network**.
3. If the device is not already powered on, insert the batteries into the **Interior Unit**.
4. After a short time, **Continue Setup** appears at the bottom of the Home app.
5. Tap **Continue** and then follow the on-screen instructions to finish the setup, including recording options.

6. The device is added automatically after a short time.

Note

- If NFC connection fails, remove your phone case and try again. Thick or metallic cases may interfere with NFC recognition.
- This feature is supported only on phones manufactured by Apple.

Connecting Manually

You can connect your device manually. Choose the method below that your device supports.

1. Enable Bluetooth on your iPhone and then connect it to the same Wi-Fi network as your hub.
2. Remove the **Battery Cover** of the **Interior Unit**, and then press and hold the **Option Button** for 3 seconds.

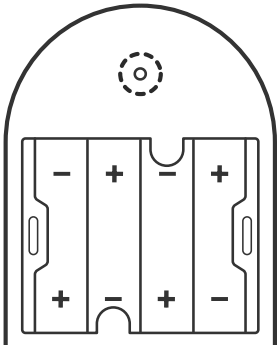

3. Open the **Apple Home** app, tap **+** in the top-right corner and then tap **Add Accessory**.
4. Scan the Matter QR code on the device, or use the printed label included in the manual box.

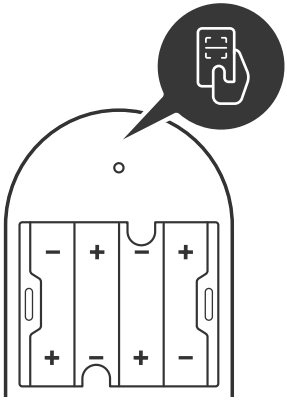

5. If the connection isn't completed using the methods above, tap **More Options...**, and then add the device in one of the following ways:
   - Select the device you want to add from the **Nearby Accessories** list.
   - Enter the setup code (shown below the Matter QR code) in the blank boxes, and then tap **Continue**.
6. Set the room location and name, and then complete the device connection.

Note

- The device must be powered on to connect.
- If NFC connection fails, remove your phone case and try again. Thick or metallic cases may interfere with NFC recognition.

Connecting via LG ThinQ App (US only)

You can connect your device using the **LG ThinQ** app. Use Direct NFC for the fastest setup. It works even when the device is powered off.

Note

- A Matter-compatible Thread Border Router hub is required to connect the lock to the app and use smart features, including remote control, automations, and settings customization.
- Make sure your **Matter Hub** is powered on and connected to the internet.
- Your phone and hub must be on the same Wi-Fi network.
- Keep the device, phone, and hub within close range of each other during setup.
- The device must be powered on to connect.

1. Enable Bluetooth on your phone and then connect it to the same Wi-Fi network as your hub.
2. Open the **LG ThinQ** app, tap **+** in the top-right corner and then tap **Add Product**. Select your device.
3. Make sure the device is installed and powered on, and then tap **I've turned it on**.
4. Hold your phone near the NFC area on the device, following the on-screen guide.

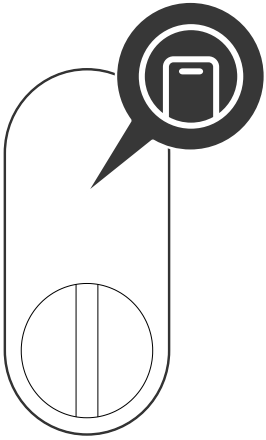

5. If NFC isn't available, tap **Add without NFC** and choose one of the following:
   - Scan QR: Scan the Matter QR code on the device or package.

- Enter setup code: Enter the setup code printed on the device or package.

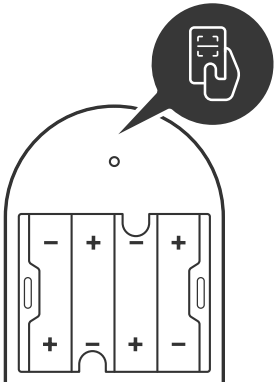

Note

If NFC connection fails, remove your phone case and try again. Thick or metallic cases may interfere with NFC recognition.

Operation

Warning

To reduce the risk of fire, electric shock, or injury to persons, read the Important Safety Instructions before operating this appliance.

Managing Authentication

Follow these detailed procedures to register, change, or delete Master and user PIN codes, while ensuring compliance with security policies and operational constraints for safe device management.

Note

- **Registration or Configuration:** The process terminates automatically if there is no input for 30 seconds. This applies to all intermediate steps until the procedure is fully completed.
- **PIN Authentication or Manual Locking:** The process terminates automatically if there is no input for 10 seconds after touching the **Number Keypad**.
- Upon termination, the **Number Keypad** backlights fade out and turn off with the LED, and the device returns to standby mode. No termination sound is played.
- When the **Deadbolt** is locked, touching the **Number Keypad** turns on all backlights and the device waits for PIN authentication. This is the same regardless of calibration status or locking mode.
- When the **Deadbolt** is unlocked and calibration has **not** been completed, touching the **Number Keypad** plays only a beep error sound. The LED and **Number Keypad** backlights do not illuminate.
- When the **Deadbolt** is unlocked and calibration **is** complete, touching the **Number Keypad** turns on only the ✓ button backlight, and the device waits for a locking command. A single touch anywhere on the **Number Keypad** locks the **Deadbolt**; you do not need to press the ✓ button. In Auto-Lock mode, if the door is detected as open, only a beep error sound plays instead.
- When you press a number key, that key's backlight blinks and a key tone plays. Pressing the ✓ button does not blink or play a key tone.
- Pressing the **Option Button** at any point during registration, configuration, or authentication returns the device to the initial **Option Button** screen.

Master PIN

Register or update your 6-digit Master PIN to enable electronic locking and manage administrative access to your device.

Registering the Master PIN

The door cannot be locked electronically until the Master PIN is registered. It can only be locked manually using a **Mechanical Key** or by turning the **Manual turnpiece** on the **Interior Unit**.

Follow these steps to register your Master PIN:

1. Remove the battery cover of the **Interior Unit** and press the **Option Button**.
2. Enter your desired 6-digit Master PIN and press the ✓ button.
3. The registered Master PIN will be displayed sequentially on the **Number Keypad**. The process will complete automatically.

> **Note**
>
> - If you enter fewer than 6 digits and press the ✓ button, or if you enter more than 6 digits, the **Device LED** blinks red three times. Simply enter your PIN again. There is no limit on the number of attempts.
> - Do not share your **Master PIN** with others.
> - If you enter a Master PIN code that does not meet the security requirements, such as sequential digits (1234, 4321) or repeated digits (1111), the **Device LED** blinks red three times. Simply enter a different Master PIN code. There is no limit on the number of attempts.

Changing the Master PIN

Follow these steps to change the Master PIN:

1. Remove the battery cover of the **Interior Unit** and then press the **Option Button**.
2. Press the Master PIN code and then press the ✓ button.
3. Press **0** on the **Number Keypad** and then press the ✓ button.
4. Enter the new 6-digit Master PIN and press the ✓ button.
5. The registered Master PIN will be displayed sequentially on the **Number Keypad**. The process will complete automatically.

> **Note**
>
> If an incorrect Master PIN is entered, an error is displayed and the procedure will terminate automatically.

PIN Code

Manage user access by registering up to 150 unique PIN codes. Follow the specific procedures for individual or bulk deletion while adhering to security guidelines.

Registering a PIN Code

Follow these steps to register a new PIN code:

1. Remove the battery cover of the **Interior Unit** and then press the **Option Button**.
2. Press the Master PIN code and then press the ✓ button.
3. Press **1** on the **Number Keypad** and then press the ✓ button.
4. Enter a new PIN code (4 to 12 digits) and then press the ✓ button.
5. The registered PIN code will be displayed sequentially on the **Number Keypad**, and the procedure will complete automatically.

Note

- You can set up to 250 PIN codes total (**150** on the device, **100** via the app). Device-set PINs are not visible in the app. Exceeding the limit ends the procedure with an error.
- If you enter fewer than 4 digits and press the ✓ button, or if you enter a 13th digit, the **Device LED** blinks red three times. Simply enter your PIN code again. There is no limit on the number of attempts.
- If you enter a PIN code that does not meet the security requirements, such as sequential digits (1234, 4321) or repeated digits (1111), the **Device LED** blinks red three times. Simply enter a different PIN code. There is no limit on the number of attempts.
- Only one PIN code can be registered per procedure. The procedure ends once a PIN code is registered; repeat the steps to register additional codes.
- Registered PIN codes will not be synchronized with the app, even after the device is linked via Matter.

Deleting an Individual PIN Code

Follow these steps to delete an individual PIN code:

1. Remove the **Battery Compartment** cover of the **Interior Unit** and then press the **Option Button**.
2. Press the Master PIN code and then press the ✓ button.
3. Press **2** on the **Number Keypad** and then press the ✓ button.
4. Enter the PIN code you wish to delete and then press the ✓ button.
5. The deletion is complete, and the procedure will terminate automatically.

Note

- If the entered PIN code is not registered, an error is indicated and you can enter the PIN code again. There is no limit on the number of attempts.
- Only one PIN code can be deleted per procedure. The procedure ends once a PIN code is deleted; repeat the steps to delete additional codes.

Deleting All PIN Codes

Follow these steps to delete all PIN codes:

1. Remove the **Battery Compartment** cover of the **Interior Unit** and then press the **Option Button**.
2. Press the Master PIN code and then press the ✓ button.
3. Press **3** on the **Number Keypad** and then press and hold the ✓ button for **3 seconds**.
4. All registered PIN codes are deleted, and the procedure will terminate automatically.

> **Note**
>
> If the button is released within 3 seconds, an error is indicated and a screen with the ↩ and ✓ buttons appears.

Operational Scenarios

The LG door lock can be unlocked in several ways. Use the following features to unlock the door.

> **Note**
>
> If wind pressure or a mechanical load prevents the **Deadbolt** from moving, the operation stops: an error sound plays and the **Device LED** blinks red three times. Check that the door is fully closed and that nothing is obstructing the **Deadbolt**, and then try again.

Apple Home Key (UWB)

UWB (Ultra-Wideband) technology allows the device to automatically detect your phone or smartwatch as you approach, providing a convenient hands-free unlocking experience.

1. Approach the door while carrying your connected phone or smartwatch.
2. The LG door lock will detect your proximity and unlock automatically.

> **Note**
>
> - In the **Wallet app**, ensure the **Unlock on Approach** feature is enabled for your LG door lock key.
> - This feature is only available on phones equipped with a **UWB chip**.
> - **Bluetooth** must be enabled on your phone for the UWB feature to function correctly.

Apple Home Key (NFC)

NFC (Near Field Communication) technology allows the device to detect your phone or smartwatch as you tap it on the door lock.

1. Tap your **iPhone** or **Apple Watch** on the **Number Keypad** of the LG door lock.
2. The LG door lock will detect your tap and unlock automatically.

> **Note**
>
> If NFC recognition fails, remove your phone case and try again. Thick or metallic cases may interfere with NFC recognition.

PIN Code

Enter your registered PIN code on the **Number Keypad** to unlock the door. See *Registering a PIN Code* to add new PIN codes.

1. Activate the **Number Keypad** by touching it.
2. Enter your PIN code (4 to 12 digits) on the **Number Keypad**.
3. Press the ✓ button to unlock the door.

Note

- For security, avoid using easily guessable numbers such as birthdates or repeated digits.
- If there is no input for 10 seconds after touching the **Number Keypad**, an error is indicated and the procedure terminates.
- After 5 consecutive failed PIN code attempts, the device will be locked for 1 minute. During the lockout, the **Number Keypad** counts down from 6 to 1 to show the remaining time, and a success sound plays when PIN authentication becomes available again.
- During the lockout you can still unlock the door using any authentication method other than a PIN code — the app, a **Mechanical Key**, NFC, or UWB — and doing so clears the lockout immediately.

Mobile App Unlock

You can lock or unlock the LG door lock through the app, such as the **Apple Home** app, the **LG ThinQ** app, or a compatible app.

1. Launch the app paired with your device.
2. Navigate to the **Home** tab, device list, or the section where the device is assigned and then tap your door lock.
3. When the device is in the **Locked** state, tap the device control once to open the door.

> **Note**
>
> Available features may vary depending on the app.

Mechanical Key

Use the **Mechanical Key** included in the package to manually unlock the door.

The **Mechanical Key** provides a manual override for unlocking the door in emergencies, such as a completely depleted battery or electronic malfunction.

1. Rotate the **Number Keypad** on the **Exterior Unit** sideways to reveal the **Keyhole** and then insert the **Mechanical Key**.
2. Turn the key clockwise to unlock the **Deadbolt**.

> **Note**
>
> Replacement **Mechanical Keys** are not provided for security reasons. If all provided **Mechanical Keys** are lost, the entire LG door lock unit must be replaced. Please manage your keys with extreme care.

General Configuration

Configure core device settings, including locking modes, sensor calibration, and smart home network pairing.

Auto/Manual Locking Settings

By default, Auto-Lock is turned off (Manual-Lock mode), so the door does not lock by itself when closed. You can turn Auto-Lock on to have the door lock automatically.

1. Remove the battery cover of the **Interior Unit** and press the **Option Button**.
2. Press the Master PIN code and then press the ✓ button.
3. Press **4** to turn Auto-Lock on or **6** to turn Auto-Lock off and then press the ✓ button.

Note

- In Manual-Lock mode, the door will not lock automatically when closed. You must manually lock the door after closing it.
- In Auto-Lock mode, the door will automatically lock after the configured time.
- In Auto-Lock mode, if the **Deadbolt** is unlocked and the door is neither opened nor closed, the **Deadbolt** locks automatically after **1 minute**.
- Auto-Lock and keypad locking require sensor calibration. Before calibration is complete, touching the **Number Keypad** while the **Deadbolt** is unlocked plays only a beep error sound. See *Door Sensor*.
- In Auto-Lock mode, you can also lock the door before the auto-lock time elapses: touch the **Number Keypad** — only the ✓ button lights up — and then touch the **Number Keypad** once more to lock the **Deadbolt**.
- In Manual-Lock mode, no locking action occurs while the **Deadbolt** is unlocked, regardless of whether the door is opened or closed. To lock the door, touch the **Number Keypad** — only the ✓ button lights up — and then touch it once more.
- When you lock the door by turning the **Manual turnpiece** from the inside, only a locking sound is played; the LED does not operate.

Door Sensor

The door sensor allows the device to accurately recognize the door's open and closed states. Follow the steps below to ensure the LG door lock operates correctly.

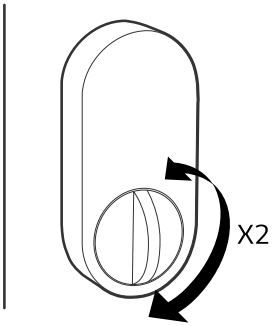

1. Close the door, and then turn the **Manual turnpiece** from locked to unlocked twice within 2 seconds (locked → unlocked → locked → unlocked) to complete the calibration.
2. Open and close the door to verify that the **Deadbolt** locks properly.

Note

- Perform calibration from inside the home, while someone is present at home, or while carrying the **Mechanical Key** to prevent being locked out.
- If calibration fails, repeat the entire calibration procedure from the beginning.
- If the 6-axis sensor fails or the calibration values drift, the device may not detect the closed state. In that case, touching the **Number Keypad** plays a door sensor alarm sound, but you can still lock the **Deadbolt** with a single touch on the **Number Keypad**, so the door can be locked when you leave.

Caution

Do not operate the **Manual turnpiece** twice while the door is open. Doing so makes the sensor register the open door as closed. Once the door state is registered as closed, the lock accepts locking commands regardless of whether the door is actually open or closed, so the **Deadbolt** may extend while the door is still open. Recalibrate with the door fully closed to restore correct detection.

Bluetooth Pairing (Matter Device Connection)

You can connect your LG door lock as a Matter device through Bluetooth pairing. Follow the steps below to connect the device to your smart home network.

1. Remove the battery cover of the **Interior Unit**.

2. Press and hold the **Option Button** for 3 seconds. Release the button immediately after you hear the entry sound, within 10 seconds.

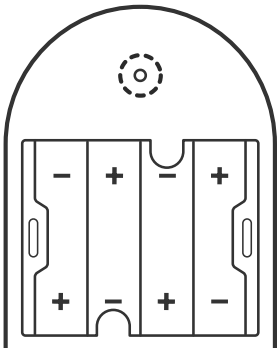

3. Once the device enters Pairing Standby mode (for 15 minutes) — the **Device LED** lights green and rotates slowly clockwise — open your app and scan the Matter QR code on the device. Complete the connection process within this timeframe.
4. While the Matter device is connecting, the **Device LED** blinks blue and green. When the connection completes, the **Device LED** lights blue and rotates clockwise with a network success sound.

Note

- Entering Pairing Standby mode will delete any previously connected Matter devices. However, all other authentication methods stored in the LG door lock will remain unchanged.
- Matter device connection can be performed regardless of whether a **Master PIN** has been registered.
- If the connection fails, an error sound will play and the **Device LED** will blink red three times.
- You can enter pairing mode by tapping **Turn On Pairing Mode** in the Apple Home app.
- A pairing entry sound plays when you have held the button for 3 seconds, followed by a countdown sound that continues until 10 seconds. Release the button while the countdown sound is playing to enter Bluetooth pairing mode.
- If you keep holding, a second entry sound plays at 10 seconds and the device enters Factory Reset mode instead.
- If you do not want a factory reset, keep holding the button for 20 seconds or longer. A termination sound plays and the procedure is canceled.

Device Alerts and Alarms

In addition to the notifications sent through the app, the device itself produces audible and visual alerts when it detects conditions that may require your attention.

Tamper Alarm

If the internal connector of the **Interior Unit** is disconnected without authorization, the device treats this as a tampering attempt and sounds a continuous tamper alarm for up to 10 minutes. The alarm is intended to deter intruders and alert anyone nearby.

> **Note**
>
> - To stop the alarm, press the **Option Button** on the **Interior Unit**, or remove and reinsert the **Batteries**.
> - After the alarm is cleared, the device will not operate unless the front connector is properly connected. In that state, pressing the **Option Button** produces only a beep, and no operation is possible other than turning the **Manual turnpiece** by hand.

Impact Alarm

If the device detects an abnormal impact on the door, it sounds a continuous alarm for up to 10 minutes.

> **Note**
>
> To stop the alarm, press the **Option Button** on the **Interior Unit**, or remove and reinsert the **Batteries**.

Low Battery Alarm

When the remaining battery charge falls to 30 % or less, the device sounds a low battery alert each time the motor operates to lock or unlock the door. The **Device LED** lights orange in the downward pattern and all **Number Keypad** backlights turn on.

> **Note**
>
> The alert repeats on every motor operation until the **Batteries** are replaced. The lock continues to operate normally while in the low battery state, and the alert clears once the **Batteries** are replaced.

Door Ajar Alarm

This alarm is turned off by default. When it is enabled in Auto-Lock mode, the device monitors how long the door remains open. If the door stays open for 1 minute, the buzzer sounds three times in total — at 1 minute, 1 minute 30 seconds, and 2 minutes. The alarm stops if the door is closed before all three warning sounds are issued.

Note

- The door left open buzzer operates only in Auto-Lock mode and requires sensor calibration to be complete. In Manual-Lock mode, or before calibration, the device cannot detect whether the door is open and will not sound this alarm.
- While the door left open alarm is sounding, the **Number Keypad** does not respond.

Factory Reset

When the device is factory reset, all registered credentials will be deleted and all app connections will be removed.

1. Press and hold the **Option Button** for 10 seconds. Release the button immediately after you hear the entry sound.

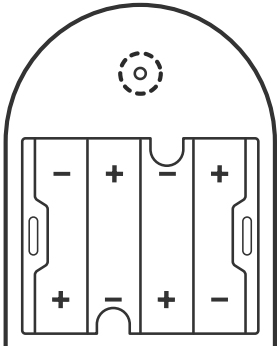

2. The **Device LED** blinks red at regular intervals to indicate that the factory reset has started.
3. The device will perform the reset. Once completed, the device restarts: a power-on sound plays, the **Number Keypad** backlights turn on and then off, and the **Device LED** lights green and rotates clockwise.

Note

- A pairing entry sound plays at 3 seconds and a countdown sound continues until 10 seconds. To perform a factory reset, keep holding the button past the countdown until the factory reset entry sound plays at 10 seconds, and then release the button before 20 seconds.
- If the **Option Button** is held for 20 seconds or longer, a termination sound will play and the procedure will be canceled.

Caution

A factory reset erases all stored data. This action cannot be undone.

Apple Home Application Features

Communicate with the device from a smartphone using the convenient smart features.

- **Lock/Unlock**
  Lock or unlock the **Deadbolt** from the app.

- **Lock/Unlocked State**
  Check the door's lock status in real time without having to go near it.

- **Door Open State**
  You can check whether the door is open. This feature is available only after calibration is complete. If it seems incorrect, run calibration again.

- **Name the Lock**
  Give the device a recognizable name so you can easily find and manage it from the hub later. You can name the lock during onboarding and change it later in the device settings.

- **Battery Level**
  Shows the remaining battery charge as a real-time percentage. When the charge falls below the warning threshold, the app sends a push notification and the device beeps each time it locks or unlocks until you replace the batteries.

- **Approach Direction**
  Customize this lock to only detect an approach from a certain direction. This will help prevent the door unlocking accidentally.

- **Manage Access**
  Manage who can enter your home and how they unlock the door.
  - **Residents**
    Residents of this home are allowed to unlock all locks using the Home app, Siri, access codes, or with the home key in Wallet.
  - **Guest**
    Set a schedule for specific accessories, then send an invitation.
  - **PIN Code Access**
    Access codes can be used to unlock allowed lock accessories with a keypad.

- **Lock After Closing**
  Set how long the device waits before locking after the door is closed, or turn off Auto Lock to lock the door manually. (default: Off)
  For security, Auto-Lock is available only after a PIN code is registered or the device is paired with the app.

- **Sound and Display**

  Adjust the sound and indicator settings of the device.

  – **Sounds**

  Play a sound for touchpad interactions, when the door locks or unlocks, and other interactions. Drag the slider to adjust the volume.

  – **Door Left Open**

  Play a sound three times if the door is open for more than two minutes.

  To turn this on, finish calibrating your door lock and turn on Auto-Lock.

  – **Touchpad Light Ring**

  Turn the ring-shaped status light on the touchpad on or off.

- **Calibrate Door Lock**

  Calibrate the sensor so the device can tell whether the door is open or closed. It is required for door state, auto-lock, and the door left open alarm. Close the door fully, tap **Calibrate**, and wait for the success message.

- **Room Selection**

  Select the room where you installed the lock. You can also create a new room and assign the lock to it.

- **Add to Home View**

  Show the lock on the Home tab in the **Home** app.

- **Include in Favorites**

  Add the lock to Favorites for quick access from the top of the home tab and control center.

- **Documentation**

  – **Owner's Manual**

  Open the full user manual from the app to read detailed information about every feature of your device.

  – **Troubleshooting**

  Select an issue from the list to view the troubleshooting steps.

- **Add Automation**

  Automate the lock by setting up events, such as locking the door at a scheduled time.

> **Note**
>
> Available only when a Home Hub is connected.

- **Status and Notifications**

  Configure which notifications you receive from the door lock and whether they appear in Home summaries. Additional options are available when a Home Hub or door lock is connected.

  – **Door Left Open**

    How long the door must be left open before you receive a notification

- **Accessory Info**

  – **Manufacturer**

  – **Serial Number**

  – **Model**

  – **Firmware**

- **Logs**

  Download logs to the iPhone.

LG ThinQ Application Features (US only)

Communicate with the device from a smartphone using the convenient smart features.

- **Door Open Status**

  Shows the current lock status (locked, unlocked, jammed, checking) and whether the door is open or closed in real time. Door state is accurate only after sensor calibration is complete.

- **User Management**

  Add, edit, or remove users and assign one or more PIN codes to each user.

  – **Temporary User**

    Issue a PIN that works only during a time window you set, optionally limited to selected days of the week. Each temporary user can hold one recurring PIN code.

- **One-Time Password**

  Issue a PIN that works only once. After being used, the code must be deleted manually to free a slot.

- **History**

  The app sends a notification for each of the following events. The only alarm you can enable or disable in the app is the **Door Left Open Alarm**.

  – **Arrival Notification**

    Notifies you when the door is unlocked from outside, identifying the unlock method (such as a PIN code or one-time PIN) and the user when known.

  – **Abnormality Detection Alert**

    Notifies you when the device detects unusual activity, such as repeated failed unlock attempts, tamper attempts, a door left open for too long, or a **Deadbolt** jam.

  – **Low Battery Alert**

    Notifies you when the battery needs to be replaced.

- **Battery Level**

  Shows the remaining battery charge as a real-time percentage. When the charge falls below the warning threshold, the app sends a push notification and the device beeps each time it locks or unlocks until you replace the batteries.

- **Smart Routines**

  Trigger other connected devices automatically based on the state of your device, or use it as part of a scene such as "Arriving Home" or "Leaving Home". Advanced automations require a compatible home hub on the same network.

- **Abnormality Detection**

  The device automatically detects unusual activity, records it in the history, and can send a push notification.

- **Owner's Manual**

  Open the full user manual from the app to read detailed information about every feature of your device.

- **Edit Nickname**

  Give the device a recognizable name so you can easily find and manage it from the hub later. You can name the lock during onboarding and change it later in the device settings.

- **Location**

  Place the device in a room or area within your home (for example, "Home > Living Room") to keep things organized and to group devices in automations.

- **Sound and Display**

  Adjust the sound and indicator settings of the device.

  – **Sounds**

    Play a sound for touchpad interactions, when the door locks or unlocks, and other interactions. Drag the slider to adjust the volume.

  – **Touchpad Light Ring**

    Turn the ring-shaped status light on the touchpad on or off.

- **Door Left Open Alarm**

  Play a sound three times if the door is open for more than two minutes.
  To turn this on, finish calibrating your door lock and turn on Auto-Lock.

- **Remote Control**

  Lock or unlock the **Deadbolt** from the app. To prevent accidental operation, unlocking requires a long press of about two seconds.

- **Auto Lock**

  Set how long the device waits before locking after the door is closed, or turn off Auto Lock to lock the door manually. (default: Off)

  For security, Auto-Lock is available only after a PIN code is registered or the device is paired with the app.

- **Calibration**

  Run sensor calibration from the app so the device can accurately detect whether the door is open or closed. It is required for the door state, automatic locking, and the door left open alarm. With the door fully closed, start calibration from the device settings and wait for the success message before leaving the screen; if it fails, try again. You can also run calibration directly from the device.

- **Share Matter Device**

  Share your device with other Matter-compatible smart home services using the pairing code provided by the app, without removing it from the current service. This sharing code is separate from the code used for the device's initial registration through Matter.

- **Accessory Info**
  - **Product**
  - **Manufacturer**
  - **Model**
  - **Serial Number**
  - **Connection Method**
  - **Firmware**

- **Advanced Settings**

  Access additional configuration options for the device beyond the basic settings.

- **Maintenance**

  Access maintenance features that help keep the device in good working condition.

- **Delete Product**

  Remove the device from the app. Deleting the product unregisters it from your account and the connected service.

Maintenance

Regular Maintenance

Clean and check your LG door lock regularly to maintain its appearance and reliable performance.

Part	What to do
Device Body	Use a soft, dry, lint-free cloth or rag to gently wipe the device.
Number Keypad	Regularly wipe the keypad to remove fingerprints, dust, or smudges that may affect touch performance.
Mounting Screws	Periodically check that the mounting screws on the **Interior Unit** are secure.
Batteries	Check the battery level periodically and replace the batteries when the low-battery alert sounds. See *Replacing the Batteries*.

⚠ Caution

- Do not use water, liquid detergents, or wet cloths to clean the device. Moisture seeping into the electronic components may cause malfunctions.
- Avoid using alcohol, chemical thinners, benzene, toothpaste, abrasive cleaners, or bleach. These substances can damage the surface finish or degrade the touch sensitivity of the **Number Keypad**.
- Ensure that liquids such as water or coffee do not enter the gaps or openings of the product.
- Remove the battery if the product will not be used for an extended period of time.

Replacing the Batteries

When the battery level is low, a warning beep sounds, the **Device LED** lights orange flowing from top to bottom, and all **Number Keypad** backlights turn on.

1. Press and hold the **Battery Cover Release Button** and slide off the battery cover on the **Interior Unit**.

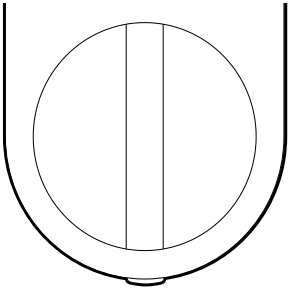

2. Remove the depleted batteries.
3. Insert 4 new AA alkaline batteries, matching the correct polarity (+/-) as indicated.
4. The lock will emit a confirmation tone to indicate that the batteries have been replaced successfully.
5. Press and hold the **Battery Cover Release Button** and reinstall the battery cover.

Note

- Once the battery level drops to 30 % or lower, a low-voltage alert will be triggered every time the motor operates (locking or unlocking) until the batteries are replaced.
- While the device will continue to function normally in this state, we recommend replacing all batteries immediately to ensure uninterrupted service.
- Use 1.5 V AA alkaline batteries (LR6). Using non-standard batteries may cause malfunctions or product damage.
- All registered PIN codes and settings are preserved during battery replacement.
- Do not use old and new batteries together.
- If the low battery indicator on the **Exterior Unit** lights up, replace all batteries with new ones immediately.
- If the batteries are fully depleted, open the **Number Keypad** on the **Exterior Unit** and supply power through the **Emergency Power** port. Alternatively, see *Mechanical Key* for emergency access.
- In an emergency, you can temporarily power the device by connecting a portable charger cable to the **Emergency Power** port (USB-C) on the **Exterior Unit** to unlock the door.
- If the batteries were replaced while the door was open, close the door and, while keeping it closed, operate only the **Manual turnpiece** on the **Interior Unit** (**locked → unlocked**) twice within 2 seconds. Open and close the door to verify the **Deadbolt** locks automatically. If it locks, calibration is complete.

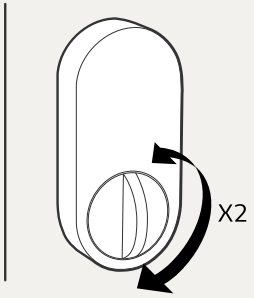

⚠ Caution

- Ensure batteries are inserted correctly according to the polarity (+/-) markings. Improper insertion contrary to the markings inside the **Battery Compartment** may cause battery leakage or rupture.
- If calibration is not performed correctly, the device will be unable to determine the precise location of the locked state.
- Use only new, high-quality, non-rechargeable alkaline batteries. Do not mix old and new batteries. Doing so may cause the batteries to leak.

Firmware Update

Update the LG door lock's firmware through the app to ensure the latest features and enhanced security. The device must be connected via the app first. See *Connecting via Apple Home App* for setup instructions.

Start the firmware update from the app. The update runs in the background, so the device continues to work normally and no LED indication is shown while it is in progress.

When the update is finished, the **Device LED** lights **green** and rotates clockwise, accompanied by a power-on sound indicating that the system has restarted.

> ⚠ **Caution**
>
> - Do not remove the batteries or disconnect the device from the network until the update is completely finished.
> - Ensure your phone remains within stable Bluetooth range of the door lock throughout the process.

Troubleshooting

Before Calling for Service

If the lock does not work as expected, find the symptom below and check the possible causes before requesting service.

The lock does not turn on	
The batteries are dead.	• Check whether the batteries are drained, and replace them with new batteries. • If the batteries die while you are away from home, connect a power source such as a portable charger to the USB-C port on the **Exterior Unit** to unlock the door from outside.
The batteries are inserted in the wrong direction.	Make sure each battery is inserted with the + and - terminals facing the correct direction.

The low battery alert sounds and the door cannot be unlocked from outside	
The battery level is too low.	• When the battery level is too low, operations such as unlocking the door from outside do not work. • Connect a power source such as a portable charger to the USB-C port on the **Exterior Unit** to unlock the door from outside. • Replace the batteries immediately when the low battery alert sounds.

The lock cannot connect to the hub	
The hub is not compatible with the lock.	This lock is a Matter device. It can only be connected to a hub that supports Matter and Thread Border Router.
There is an obstruction between the hub and the lock.	• Check whether a wall, structure, or metal object is blocking the signal between the lock and the hub. • Remove the obstruction, or move the hub closer to the lock, and then connect again.
The lock suddenly went offline while connected to the hub.	Reset the lock, and then set up the connection again.

The lock cannot be registered in the app	
Bluetooth is turned off on the smartphone.	Turn on Bluetooth on your smartphone.
The smartphone is not connected to the Wi-Fi router that was used to register the hub.	Turn on Wi-Fi on your smartphone, and connect to the same router that the hub was registered on.
The lock is not in pairing mode.	Put the lock in pairing mode to register it in the app.

The lock is shown as offline in the app	
The lock has been reset.	• If you reset the lock while it is registered in the app, the lock is shown as offline in the app. • Delete the lock from the app, and then add it again.

The lock cannot be controlled or its settings cannot be changed in the app	
The lock is disconnected in the app.	Check the connection status of the lock and the hub in the app.

Past history is not shown in the app	
The maximum storage period of the app has been exceeded.	The app stores the history for up to 3 months.

Smart routines do not work	
A device registered to the routine is not powered on or is not connected to the network.	Check the power and network connection status of every device registered to the smart routine.

Appendix

Product Specifications

Review the following specifications for detailed information on the product's hardware components and wireless connectivity.

Device	
Model	TMCDD15*
Dimensions	Exterior Unit Diameter: 3.1 in (79 mm) X 1.25 in (31.95 mm) (Depth) Interior Unit (Width X Height X Depth): 3.03 in (77 mm) X 6.5 in (165 mm) X 1.92 in (49 mm)
Weight	53.4 oz (1.5 kg)
Power Supply	DC 6 V (DC 1.5 V AA alkaline battery 4 EA)
Battery Life	Up to 6 months (typical use)
Emergency Power	DC 5 V (USB Type-C Power Supply)
Operating Temperature	-4 °F to 140 °F (-20 °C to 60 °C)
Operating Humidity	0 % to 95 % RH (Non-condensing)
IP Rating	IP55

Door Compatibility	
Door Thickness	1-9/16 in – 2 in (40 – 51 mm)
Cross Bore	2-1/8 in (54 mm)
Edge Bore	1 in (25.4 mm)
Backset	Adjustable 2-3/8 in or 2-3/4 in (60 mm or 70 mm)

Warranty

Limited Warranty - USA
ARBITRATION NOTICE: THIS LIMITED WARRANTY CONTAINS AN ARBITRATION PROVISION THAT REQUIRES YOU AND LG ELECTRONICS ("LG") TO RESOLVE DISPUTES BY BINDING ARBITRATION INSTEAD OF IN COURT, UNLESS YOU CHOOSE TO OPT OUT. IN ARBITRATION, CLASS ACTIONS AND JURY TRIALS ARE NOT PERMITTED. PLEASE SEE THE SECTION TITLED "PROCEDURE FOR RESOLVING DISPUTES" BELOW. Should your LG Smart Deadbolt Lock ("Product") fail due to a defect in material or workmanship under normal use, during the warranty period ("Warranty Period") set forth below, LG will, at its option either repair or replace the Product upon receipt of original Proof of Purchase ("POP"). This limited warranty is valid only to the original retail purchaser of the Product ("Customer" or "You") and applies only when purchased lawfully and used within the United States including U.S. Territories.

WARRANTY PERIOD:	HOW SERVICE IS HANDLED:
Parts and Labor: One (1) Year from date of delivery of original retail purchase, or from the date of delivery as per applicable law	The original sales invoice and delivery receipt specifying the Product and date of purchase and delivery are required to obtain warranty service. For any service-related inquiries, including troubleshooting assistance, visit www.lg.com or call 1-800-243-0000, or write to: ATTN: LG Customer Interactive Center 201 James Record Road SW Huntsville, Alabama 35824 **Shipping Costs** In-bound and out-bound shipping will be paid by LG during the Warranty Period.

NOTE

- Repaired or Replacement Products and parts are warranted for the remaining portion of the original warranty period or ninety (90) days, whichever is greater.
- Replacement Products and parts may be new, reconditioned, refurbished, or otherwise factory remanufactured.
- Replaced Product or part(s) will be the property of LG.
- If the original date of purchase cannot be verified, the warranty will begin on the 1st day of the manufacture month.

Disclaimer:

EXCEPT TO THE EXTENT PROHIBITED BY APPLICABLE LAW, ANY IMPLIED WARRANTY OF MERCHANTABILITY OR FITNESS FOR A PARTICULAR PURPOSE ON THE PRODUCT IS LIMITED IN DURATION TO THE DURATION OF THE ABOVE LIMITED WARRANTY. UNDER NO CIRCUMSTANCE SHALL LG BE LIABLE FOR ANY INCIDENTAL, SPECIAL, CONSEQUENTIAL OR PUNITIVE DAMAGES INCLUDING, WITHOUT LIMITATION, LOST GOODWILL, LOST REVENUE OR PROFITS, WORK STOPPAGE, PRODUCT FAILURE, IMPAIRMENT OF OTHER GOODS, LOSS OR CORRUPTION OF

PROGRAMMING OR DATA, LOSS OF USE, INJURY TO PERSONS OR PROPERTY ARISING OUT OF OR RELATED TO THE PRODUCT. LG'S TOTAL LIABILITY, IF ANY, SHALL NOT EXCEED THE PURCHASE PRICE PAID BY YOU FOR THE PRODUCT.

SOME STATES DO NOT ALLOW THE EXCLUSION OR LIMITATION OF INCIDENTAL OR CONSEQUENTIAL DAMAGES, OR ALLOW LIMITATIONS ON HOW LONG AN IMPLIED WARRANTY LASTS, SO THE ABOVE LIMITATIONS OR EXCLUSIONS MAY NOT APPLY TO YOU. THIS LIMITED WARRANTY GIVES YOU SPECIFIC LEGAL RIGHTS. YOU MAY ALSO HAVE OTHER RIGHTS THAT VARY FROM STATE TO STATE.

THIS LIMITED WARRANTY DOES NOT COVER:

- Service trips to deliver, pick up, or install, educate how to operate, correct wiring, or correct unauthorized repairs.
- Damage or loss to programs, data, or removable storage media.
- Damage or failure of the Product when used in other than normal intended use.
- Damage or failure of Product caused by incorrect electrical current or voltage (including power surge), power failures, power interruptions or inadequate electrical service, including incorrect or insufficient AC supply.
- Damage or failure of the Product resulting from improper set-up, adjustment, or operation of the Product contrary to the Product owner's manual.
- Damage or failure of the Product caused by accidents, pests and vermin, lightning, wind, fire, flood, or other acts of nature.
- Damage or failure of the Product caused by abnormal conditions or an environment where the temperature and humidity are not adequately controlled.
- Damage or failure of the Product resulting from misuse, abuse, unauthorized service, or improper maintenance.
- Damage or failure of the Product caused by the use of accessories, parts, consumable cleaning products, or services, that are not provided or approved by LG.
- Damage or failure of the Product caused by unauthorized alteration, modification or incorporation into any other product or system components.
- Damage or failure of the Product, or missing items to any Product sold "As Is", "With all Faults" or similar disclaimer.
- Damage or failure of the Product caused by transportation and/or handling, including scratches, dents, chips, and/or other damage to the finish of your Product, unless such damage results from a defect in materials or workmanship and is reported within one (1) week of delivery (Call: 1-800-243-0000).
- Products used for other than normal and proper household use (e.g., commercial or industrial use).
- Products with original serial numbers that have been removed, altered, or cannot be readily determined.
- Increases in utility cost and additional utility expenses.
- Replacement of any consumable parts including batteries.
- Minor imperfections that do not materially alter or affect functionality.

The cost of repair or replacement under the above excluded circumstances shall be borne by you.

ARBITRATION PROCEDURE FOR RESOLVING DISPUTES

ALL DISPUTES BETWEEN YOU AND LG ARISING OUT OF OR RELATING IN ANY WAY TO THIS LIMITED WARRANTY OR THE PRODUCT SHALL BE RESOLVED EXCLUSIVELY THROUGH BINDING ARBITRATION, AND NOT IN A COURT OF GENERAL JURISDICTION. BINDING ARBITRATION MEANS THAT YOU AND LG ARE EACH WAIVING THE RIGHT TO A JURY TRIAL AND TO BRING OR PARTICIPATE IN A CLASS ACTION.

Definitions. For the purposes of this section, references to "LG" mean LG Electronics U.S.A., Inc., its parents, subsidiaries and affiliates, and each of their officers, directors, employees, agents, beneficiaries, predecessors in interest, successors, assigns and suppliers; references to "dispute" or "claim" shall include any dispute, claim or controversy of any kind whatsoever (whether based in contract, tort, statute, regulation, ordinance, fraud, misrepresentation or any other legal or equitable theory) arising out of or relating in any way to the sale, condition or performance of the product or this Limited Warranty.

Notice of Dispute. In the event you intend to commence an arbitration proceeding, you must first notify LG in writing at least 30 days in advance of initiating the arbitration by sending a letter to LG at LG Electronics, USA, Inc. Attn: Legal Department-Arbitration 111 Sylvan Avenue, Englewood Cliffs, NJ 07632. You and LG agree to engage in good faith discussions in an attempt to amicably resolve your claim. The notice must provide your name, address, and telephone number; identify the product that is the subject of the claim; and describe the nature of the claim and the relief being sought. If you and LG are unable to resolve the dispute within 30 days, either party may proceed to file a claim for arbitration.

Agreement to Binding Arbitration and Class Action Waiver. Upon failure to resolve the dispute during the 30-day period after sending written notice to LG, you and LG agree to resolve any claims between us only by binding arbitration on an individual basis, unless you opt out as provided below. Any dispute between you and LG shall not be combined or consolidated with a dispute involving any other person's or entity's product or claim. More specifically, without limitation of the foregoing, any dispute between you and LG shall not under any circumstances proceed as part of a class or representative action. Instead of arbitration, either party may bring an individual action in small claims court, but that small claims court action may not be brought on a class or representative basis.

Arbitration Rules and Procedures. To begin arbitration of a claim, either you or LG must make a written demand for arbitration. The arbitration will be administered by the American Arbitration Association ("AAA") and will be conducted before a single arbitrator under the AAA's Consumer Arbitration Rules that are in effect at the time the arbitration is initiated (referred to as the "AAA Rules") and under the procedures set forth in this section. The AAA Rules are available online at www.adr.org/consumer. Send a copy of your written demand for arbitration, as well as a copy of this provision, to the AAA in the manner described in the AAA Rules. You must also send a copy of your written demand to LG at LG Electronics, USA, Inc. Attn: Legal Department-Arbitration 111 Sylvan Avenue, Englewood Cliffs, NJ 07632. If there is a conflict between the AAA Rules and the rules set

forth in this section, the rules set forth in this section will govern. This arbitration provision is governed by the Federal Arbitration Act. Judgment may be entered on the arbitrator's award in any court of competent jurisdiction. All issues are for the arbitrator to decide, except issues relating to the scope and enforceability of the arbitration provision and to the arbitrability of the dispute are for the court to decide. The arbitrator is bound by the terms of this provision.

Governing Law. The law of the state of your residence shall govern this Limited Warranty and any disputes between us except to the extent that such law is preempted by or inconsistent with applicable federal law.

Fees/Costs. You do not need to pay any fee to begin an arbitration. Upon receipt of your written demand for arbitration, LG will promptly pay all arbitration filing fees to the AAA unless you seek more than $25,000 in damages, in which case the payment of these fees will be governed by the AAA Rules. Except as otherwise provided for herein, LG will pay all AAA filing, administration, and arbitrator fees for any arbitration initiated in accordance with the AAA Rules and this arbitration provision. If you prevail in the arbitration, LG will pay your attorneys' fees and expenses as long as they are reasonable, by considering factors including, but not limited to, the purchase amount and claim amount. Notwithstanding the foregoing, if applicable law allows for an award of reasonable attorneys' fees and expenses, an arbitrator can award them to the same extent that a court would. If the arbitrator finds either the substance of your claim or the relief sought in the demand is frivolous or brought for an improper purpose (as measured by the standards set forth in Federal Rule of Civil Procedure 11(b)), then the payment of all arbitration fees will be governed by the AAA Rules. In such a situation, you agree to reimburse LG for all monies previously disbursed by it that are otherwise your obligation to pay under the AAA Rules. Except as otherwise provided for, LG waives any rights it may have to seek attorneys' fees and expenses from you if LG prevails in the arbitration.

Hearings and Location. If your claim is for $25,000 or less, you may choose to have the arbitration conducted solely on the basis of (1) documents submitted to the arbitrator, (2) through a telephonic hearing, or (3) by an in-person hearing as established by the AAA Rules. If your claim exceeds $25,000, the right to a hearing will be determined by the AAA Rules. Any in-person arbitration hearings will be held at a location within the federal judicial district in which you reside unless we both agree to another location or we agree to a telephonic arbitration.

Opt Out. You may opt out of this dispute resolution procedure. If you opt out, neither you nor LG can require the other to participate in an arbitration proceeding. To opt out, you must send notice to LG no later than 30 calendar days from the delivery/pick-up date of your purchase of the Product by either: (i) sending an e-mail to optout@lge.com, with the subject line: "Arbitration Opt Out" or (ii) calling 1-800-980-2973. You must include in the opt out e-mail or provide by telephone: (a) your name and address; (b) the date on which the product was delivered or picked up; (c) the product model name or model number; and (d) the serial number.

You may only opt out of the dispute resolution procedure in the manner described above (that is, by e-mail or telephone); no other form of notice will be effective to opt out of this dispute resolution procedure. Opting out of this dispute resolution procedure will not affect the coverage of the Limited

Warranty in any way, and you will continue to enjoy the full benefits of the Limited Warranty. If you keep this Product and do not opt out, then you accept all terms and conditions of the arbitration provision described above.

Any modifications or changes to this manual due to typographical errors or inaccuracies of stated information shall only be made by LG Electronics Inc.

LG Customer Information Center

For inquiries or comments,

visit www.lg.com or call:

1-800-243-0000 U.S.A.

Register your product Online!

www.lg.com

LG ELECTRONICS CANADA, INC. LIMITED WARRANTY - CANADA
ARBITRATION NOTICE: THIS LIMITED WARRANTY CONTAINS AN ARBITRATION PROVISION THAT REQUIRES YOU AND LG TO RESOLVE DISPUTES BY BINDING ARBITRATION INSTEAD OF IN COURT, UNLESS THE LAWS OF YOUR PROVINCE OR TERRITORY DO NOT PERMIT THAT, OR, IN OTHER JURISDICTIONS, IF YOU CHOOSE TO OPT OUT. FOR FURTHER CLARITY, THIS ARBITRATION PROVISION IS NOT APPLICABLE TO CONSUMERS RESIDING IN ONTARIO, BRITISH COLUMBIA OR QUÉBEC. IN ARBITRATION, CLASS ACTIONS AND JURY TRIALS ARE NOT PERMITTED. PLEASE SEE THE SECTION TITLED "PROCEDURE FOR RESOLVING DISPUTES" BELOW.
QUEBEC ONLY: LG stands behind its products and makes every reasonable effort to ensure its products can be maintained and repaired, as required. You may access the catalogue of available parts and services at https://www.lg.com/ca_en/support/. HOWEVER, LG IN NO WAY GUARANTEES AND MAKES NO REPRESENTATIONS REGARDING THE AVAILABILITY OF ANY SPECIFIC SPARE OR REPLACEMENT PART, REPAIR SERVICE OR INFORMATION OR INSTRUCTIONS FOR SUCH MAINTENANCE AT ANY TIME. LG EXPRESSLY DISCLAIMS ANY GUARANTEE, WARRANTY OR OBLIGATION IN RESPECT OF THAT AVAILABILITY.
Should your LG Smart Deadbolt Lock ("Product") fail due to a defect in materials or workmanship under normal and proper use, during the warranty period set forth below, LG Electronics Canada, Inc. ("LGECI") will, at its option, repair, replace or pro rate the Product upon receipt of proof of the original retail purchase. This limited warranty is valid only to the original retail purchaser of the Product and applies only to a Product distributed, purchased from an authorized retailer and used within Canada, as determined at the sole discretion of LGECI.

WARRANTY PERIOD	
LG Smart Deadbolt Lock	One (1) year from the date of original retail purchase Parts and Labor (internal/functional parts only)

Note: If the original date of purchase can not be verified, the warranty will begin sixty (60) days from the date of manufacture.

- Replacement products and parts are warranted for the remaining portion of the original warranty period or ninety (90) days, whichever is greater.
- Replacement products and parts may be new, reconditioned, refurbished, or otherwise factory remanufactured, all at the sole discretion of LGECI.

- Proof of original retail purchase specifying the Product model and date of purchase is required to obtain warranty service under this Limited Warranty.

Disclaimer:

IF YOU ARE A CONSUMER SUBJECT TO QUÉBEC, BRITISH COLUMBIA OR ONTARIO'S CONSUMER PROTECTION ACT, THE EXCLUSION OF WARRANTIES CONTAINED IN THIS SECTION DOES NOT EXCLUDE OR LIMIT THE RIGHTS AND REMEDIES THAT YOU MAY HAVE UNDER SUCH ACT, INCLUDING THE RIGHT TO MAKE A CLAIM UNDER ANY OF THE STATUTORY WARRANTIES PROVIDED THEREUNDER.

LGECI'S SOLE LIABILITY IS LIMITED TO THE LIMITED WARRANTY SET OUT ABOVE, UNLESS SUCH LIMITATION IS PROHIBITED BY THE LAWS OF THE PROVINCE IN WHICH YOU RESIDE. EXCEPT AS EXPRESSLY PROVIDED ABOVE, OR IF OTHERWISE PROHIBITED BY THE LAW OF THE PROVINCE IN WHICH YOU RESIDE, LGECI DOES NOT MAKE ANY OTHER WARRANTIES OR CONDITIONS RESPECTING THE PRODUCT, AND HEREBY DISCLAIMS ALL OTHER WARRANTIES AND CONDITIONS RESPECTING THE PRODUCT, WHETHER EXPRESS OR IMPLIED, INCLUDING BUT NOT LIMITED TO, ANY IMPLIED WARRANTY OR CONDITION OF MERCHANTABILITY OR FITNESS FOR A PARTICULAR PURPOSE, AND NO REPRESENTATIONS SHALL BE BINDING ON LGECI. LGECI DOES NOT AUTHORIZE ANY PERSON TO CREATE OR ASSUME FOR IT ANY OTHER WARRANTY OBLIGATION OR LIABILITY IN CONNECTION WITH THE PRODUCT. TO THE EXTENT THAT ANY WARRANTY OR CONDITION IS IMPLIED BY LAW, IT IS LIMITED TO THE WARRANTY PERIOD SET OUT ABOVE. UNDER NO CIRCUMSTANCES SHALL LGECI, THE MANUFACTURER OR DISTRIBUTOR OF THE PRODUCT, BE LIABLE FOR ANY INCIDENTAL, CONSEQUENTIAL, SPECIAL, DIRECT, INDIRECT, PUNITIVE OR EXEMPLARY DAMAGES, INCLUDING, WITHOUT LIMITATION, LOSS OF GOODWILL, LOST PROFITS, LOSS OF ANTICIPATED PROFITS, LOST REVENUE, LOSS OF USE, OR ANY OTHER DAMAGE, WHETHER ARISING DIRECTLY OR INDIRECTLY FROM ANY CONTRACTUAL BREACH, FUNDAMENTAL BREACH, TORT OR OTHERWISE, OR FROM ANY ACTS OR OMISSIONS. LGECI'S TOTAL LIABILITY, IF ANY, SHALL NOT EXCEED THE PURCHASE PRICE PAID BY YOU FOR THE PRODUCT.

This Limited Warranty gives you specific legal rights. You may also have other rights that vary from province to province depending on applicable provincial laws. Any term of this Limited Warranty that negates or varies any implied condition or warranty under provincial law is severable where it conflicts with such provincial law without affecting the remainder of this warranty's terms.

THIS LIMITED WARRANTY DOES NOT COVER:

- Service trips to deliver, pick up, install, clean, or to correct wiring or unauthorized repairs.
- Service trips to educate how to assemble, operate, or maintain the Product.
- Damage or failure of the Product to perform during power failures and interrupted or inadequate electrical service.
- Damage or failure of the Product resulting from operating the Product in a corrosive atmosphere or contrary to the Product owner's manual.
- Damage or failure of the Product caused by accidents, pests and vermin, lightning, wind, fire, floods, acts of nature, or any other causes beyond the control of LG.
- Damage or failure of the Product caused by unauthorized modification or alteration, or if the Product is used for other than the intended purpose.
- Damage or failure of the Product caused by incorrect electrical current or voltage.
- Damage or failure of the Product caused by transportation, storage, and/or handling, including scratches, dents, chips, and/or other damage to the finish of the Product, unless such damage is reported within one (1) week of delivery.
- Damage or missing items to any display, open box, or discounted Product.
- Refurbished Product or any Product sold "As Is", "Where Is", "With all Faults", or similar disclaimer.
- Products with original serial numbers that have been removed, altered, or cannot be readily determined.
- Increases in utility costs and additional utility expenses.
- Any noises associated with normal operation.
- Products used for other than normal and proper household use (e.g., commercial or industrial use, offices, and recreational facilities or vehicles) or contrary to the Product owner's manual.
- Costs associated with removal and reinstallation of the Product for repairs.
- Replacement of batteries, filters, or any consumable parts.
- The removal and reinstallation of the Product if it is installed in an inaccessible location or is not installed in accordance with the Product owner's manual.
- Damage or failure of the Product resulting from misuse, abuse, improper installation, repair, or maintenance. Improper repair includes the use of parts not authorized by LG. Improper installation or maintenance includes installation or maintenance contrary to the Product owner's manual.
- Damage or failure of the Product caused by the use of parts, components, accessories, consumable cleaning products, detergents, chemicals, or any other products or services that are not authorized by LG.

All costs and expenses associated with the above excluded circumstances, listed under the heading, This Limited Warranty Does Not Cover, shall be borne by the consumer.

TO OBTAIN WARRANTY SERVICE AND ADDITIONAL INFORMATION, PLEASE CALL OR VISIT OUR WEBSITE: Call 1-888-542-2623 (7 A.M. to 12 A.M., 365 days a year) and select the appropriate option from the menu,

or visit our website at https://www.lg.com

PROCEDURE FOR RESOLVING DISPUTES:

EXCEPT WHERE PROHIBITED AT LAW (INCLUDING WITH RESPECT TO QUÉBEC, BRITISH COLUMBIA AND ONTARIO CONSUMERS), ALL DISPUTES BETWEEN YOU AND LG ARISING OUT OF OR RELATING IN ANY WAY TO THIS LIMITED WARRANTY OR THE PRODUCT SHALL BE RESOLVED EXCLUSIVELY THROUGH BINDING ARBITRATION, AND NOT IN A COURT OF GENERAL JURISDICTION. EXCEPT WHERE PROHIBITED AT LAW (INCLUDING WITH RESPECT TO QUÉBEC, BRITISH COLUMBIA AND ONTARIO CONSUMERS), YOU AND LG BOTH IRREVOCABLY AGREE TO WAIVE THE RIGHT TO A JURY TRIAL AND TO BRING OR PARTICIPATE IN A CLASS ACTION.

Definitions. For the purposes of this section, references to "LG" mean LG Electronics Canada, Inc., its parents, subsidiaries and affiliates, and each of their officers, directors, employees, agents, beneficiaries, predecessors in interest, successors, assigns and suppliers; references to "dispute" or "claim" shall include any dispute, claim or controversy of any kind whatsoever (whether based in contract, tort, statute, regulation, ordinance, fraud, misrepresentation or any other legal or equitable theory) arising out of or relating in any way to the sale, condition or performance of the product or this Limited Warranty.

Notice of Dispute. In the event you intend to commence an arbitration proceeding, you must first notify LG in writing at least 30 days in advance of initiating the arbitration by sending a letter to LGECI Legal Team at 20 Norelco Drive, North York, Ontario, Canada M9L 2X6 (the "Notice of Dispute"). You and LG agree to engage in good faith discussions in an attempt to amicably resolve your claim. The notice must provide your name, address, and telephone number; identify the product that is the subject of the claim; and describe the nature of the claim and the relief being sought. If you and LG are unable to resolve the dispute within 30 days of LG's receipt of the Notice of Dispute, the dispute shall be resolved by binding arbitration in accordance with the procedure set out herein. You and LG both agree that, during the arbitration proceeding, the terms (including any amount) of any settlement offer made by either you or LG will not be disclosed to the arbitrator until the arbitrator determines the dispute.

Agreement to Binding Arbitration and Class Action Waiver. Upon failure to resolve the dispute during the 30 day period after LG's receipt of the Notice of Dispute, you and LG agree to resolve any claims between you and LG only by binding arbitration on an individual basis, unless you opt out as provided below, or you reside in a jurisdiction that prevents full application of this clause in the circumstances of the claims at issue (in which case if you are a consumer, this clause will only apply if you expressly agree to the arbitration). To the extent permitted by applicable law, any dispute between you and LG shall not be combined or consolidated with a dispute involving any other person's or entity's product or claim. More specifically, without limitation of the foregoing, except to the extent such a prohibition is not permitted at law, any dispute between you and LG shall not under any circumstances proceed as part of a class or representative action. Instead of arbitration, either party may bring an individual action in small claims court, but that small claims court action may not be brought on a class or representative basis except to the extent this prohibition is not permitted at law in your province or territory of jurisdiction as it relates to the claims at issue between you and LG. This does not apply to consumers in Ontario, British Columbia and Québec. In accordance with

provincial legislation, the consumer and LG may agree to resolve the dispute using any procedure available, including commencing the action before the competent courts of those provinces.

Arbitration Rules and Procedures. To begin arbitration of a claim, either you or LG must make a written demand for arbitration. The arbitration will be private and confidential, and conducted on a simplified and expedited basis before a single arbitrator chosen by the parties under the provincial or territorial commercial arbitration law and rules of the province or territory of your residence. You must also send a copy of your written demand to LG at LG Electronics, Canada, Inc., Attn: Legal Department- Arbitration, 20 Norelco Drive, North York, Ontario M9L 2X6. This arbitration provision is governed by your applicable provincial or territorial commercial arbitration legislation. For consumers in Ontario, British Columbia and Québec, the applicable arbitration legislation only applies if consumers agree to submit the dispute to arbitration. Judgment may be entered on the arbitrator's award in any court of competent jurisdiction. All issues are for the arbitrator to decide, except that, issues relating to the scope and enforceability of the arbitration provision and to the arbitrability of the dispute are for the court to decide. The arbitrator is bound by the terms of this provision.

Governing Law. The law of the province or territory of your purchase shall govern this Limited Warranty and any disputes between you and LG except to the extent that such law is preempted by or inconsistent with applicable federal or provincial/territorial law. Should arbitration not be permitted for any claim, action, dispute or controversy between you and LG, you and LG attorn to the exclusive jurisdiction of the courts of the province or territory of your purchase for the resolution of the claim, action, dispute or controversy between you and LG.

Fees/Costs. You do not need to pay any fee to begin an arbitration. Upon receipt of your written demand for arbitration, LG will promptly pay all arbitration filing fees unless you seek more than $25,000 in damages, in which case the payment of these fees will be governed by the applicable arbitration rules. Except as otherwise provided for herein, LG will pay all filing, administration and arbitrator fees for any arbitration initiated in accordance with the applicable arbitration rules and this arbitration provision. If you prevail in the arbitration, LG will pay your attorneys' fees and expenses as long as they are reasonable, by considering factors including, but not limited to, the purchase amount and claim amount. Notwithstanding the foregoing, if applicable law allows for an award of reasonable attorneys' fees and expenses, an arbitrator can award them to the same extent that a court would. If the arbitrator finds either the substance of your claim or the relief sought in the demand is frivolous or brought for an improper purpose (as measured by the applicable laws), then the payment of all arbitration fees will be governed by the applicable arbitration rules. In such a situation, you agree to reimburse LG for all monies previously disbursed by it that are otherwise your obligation to pay under the applicable arbitration rules. Except as otherwise provided for, LG waives any rights it may have to seek attorneys' fees and expenses from you if LG prevails in the arbitration.

Hearings and Location. If your claim is for $25,000 or less, you may choose to have the arbitration conducted solely (1) on the basis of documents submitted to the arbitrator, (2) through a telephonic hearing, or (3) by an in-person hearing as established by the applicable arbitration rules. If your claim exceeds $25,000, the right to a hearing will be determined by the applicable arbitration rules. Any in-person arbitration hearings will be held at the nearest, most mutually-convenient arbitration location

available within the province or territory in which you reside unless you and LG both agree to another location or agree to a telephonic arbitration.

Severability and Waiver. If any portion of this Limited Warranty (including these arbitration procedures) is unenforceable, the remaining provisions will continue in full force and effect to the maximum extent permitted by applicable law. Should LG fail to enforce strict performance of any provision of this Limited Warranty (including these arbitration procedures), it does not mean that LG intends to waive or has waived any provision or part of this Limited Warranty.

Opt Out. The arbitration provision requires you and LG to resolve disputes by binding arbitration instead of court, unless the laws of your province or territory do not permit that, or, in other jurisdictions, if you choose to opt out. The arbitration provision does not apply to consumers in Ontario, British Columbia and Québec.

For individuals that fall within the binding arbitration provisions, you may opt out of this dispute resolution procedure. If you opt out, neither you nor LG can require the other to participate in an arbitration proceeding. To opt out, you must send notice to LG no later than 30 calendar days from the date of the first consumer purchaser's purchase of the product by either (i) sending an e-mail to optout@lge.com, with the subject line: "Arbitration Opt Out;" or (ii) calling 1-800-980-2973. You must include in the opt out e-mail or provide by telephone: (a) your name and address; (b) the date on which the product was purchased; (c) the product model name or model number; and (d) the serial number (the serial number can be found (i) on the product; or (ii) online by accessing https://www.lg.com/ca_en/findmodel_serial/).

In the event that you "Opt Out", the law of the province or territory of your residence shall govern this Limited Warranty and any disputes between you and LG except to the extent that such law is preempted by or inconsistent with applicable federal or provincial/territorial law. Should arbitration not be permitted for any claim, action, dispute or controversy between you and LG, you and LG agree to attorn to the exclusive jurisdiction of the courts of the province or territory of your residence for the resolution of the claim, action, dispute or controversy between you and LG.

You may only opt out of the dispute resolution procedure in the manner described above (that is, by e-mail or telephone); no other form of notice will be effective to opt out of this dispute resolution procedure. Opting out of this dispute resolution procedure will not affect the coverage of the Limited Warranty in any way, and you will continue to enjoy the full benefits of the Limited Warranty. If you keep this product and do not opt out, then you accept all terms and conditions of the arbitration provision described above.

Conflict of Terms. In the event of a conflict or inconsistency between the terms of this Limited Warranty and the End User License Agreement ("EULA") in regards to dispute resolution, the terms of this Limited Warranty shall control and govern the rights and obligations of the parties and shall take precedence over the EULA.

LG Customer Information Center

For inquiries or comments,

visit www.lg.com or call:

1-888-542-2623 CANADA

Register your product Online!

www.lg.com

Trademarks and Licenses

Bluetooth®



The Bluetooth® word mark and logos are registered trademarks owned by Bluetooth SIG, Inc. and any use of such marks by Lumi United Technology Co., Ltd is under license. Other trademarks and trade names are those of their respective owners.

Open Source Software Notice Information

To obtain the source code that is contained in this product, under GPL, LGPL, MPL, and other open source licenses that have the obligation to disclose source code, and to access all referred license terms, copyright notices and other relevant documents, please visit **https://opensource.lge.com**.

LG Electronics will also provide open source code to you for a charge covering the cost of performing such distribution upon email request to **opensource@lge.com.**

This offer is valid to anyone in receipt of this information for a period of three years after our last shipment of this product.