Job Name/Location: **Tag No:**

Date:

PO No.:

For: ☐ File ☐ Resubmit ☐ Approval ☐ Other _____

Architect: **GC:**

Engr: **Mech:**

Rep:
(Company) (Project Manager)

APHWC501D

58 Gal. Heat Pump High-Efficiency Electric Water Heater

With Demand Response Ready

Features:

- Square-shaped heat pump water heater with inverter technology in a silver finish.
- Anode rod and enamel-coating in water tank assists in preventing corrosion, and helps promote longer water tank life.
- Self-diagnosis function using LG ThinQ™
- Simple control with digital display includes four (4) buttons: Mode, Set, Up, and Down.
- Built-in LG ThinQ Wi-Fi (download app) allows to update operation modes (Auto, Heat Pump, Turbo, Vacation, and Schedule), target water temperature, Demand Response, and Time of Use.
- Two (2) separate heat sources – heat pump plus two (2) heating elements – enable back-up operation if one component fails.
- Water temperature sensor monitors water draw and helps to optimize operation.
- Demand Response ready with built-in EcoPort® (CTA-2045 Port).

Modes:

- Auto
- Turbo
- Heat Pump
- Vacation

Performance:

Nominal Capacity (gal.)	58
Rated Storage Volume (gal.)	53
FHR (gal.)	76
Recovery 90° Rise (gal./hour)	22.7
Annual Energy Consumption (kW/h)	1262
UEF	3.93

FHR = First Hour Rating UEF = Uniform Energy Factory

Electrical:

Power Supply (V / Hz / Ø)[1,2]	208/240 / 60 / 1
MOP (A)	30.0
MCA (A)	30.0
Heater Rated Amps (240V) (A)	20.8
Compressor Rated Amps (A)	1.5
Compressor Rated Load Amps (RLA) (208V / 240V)	3.3 / 3.1
Compressor Rated Power Input (W)	376
Fan Motor Output (W)	43
Fan Full Load Amps (FLA)	0.22
Upper Element Wattage (kW) 208V / 240V	3.8 / 5
Lower Element Wattage (kW) 208V / 240V	3.8 / 5

MOP - Maximum Overcurrent Protection MCA - Minimum Circuit Ampacity

Water System:

Maximum Working Pressure (Water Tank) (psi)	150
Design Pressure System (High Side)	290
Design Pressure System (Low Side)	130.5
Water Connection Location	Side
Water Connection Size (in.)	3/4 NPT
Drain Hose Size (I.D.)	3/4, 1/2 NPT

Accessory:

☐ Duct Adapter – PHDCLA0

Operating Conditions:

Heating (°F)	23 to 120

Unit Data:

Refrigerant Type	R134a
Refrigerant Charge (oz.)	23
Refrigerant Control	Electronic Expansion Valve (EEV)
Compressor Type	Twin Rotary
Rated Air Flow Rate (CFM)	155.4
Hot Water Setpoint Range (°F)	95 to 140
Sound Pressure Level[3] (Auto) dB(A)±3	42
Sound Pressure Level[3] (Turbo) dB(A)±3	45
Insulation	Foam, 1.6 ~ 2.4 in.
Net Dimensions (W x H x D, in.)	22-27/32 x 63-31/32 x 22-29/32
Shipping Dimensions (W x H x D, in.)	29-1/16 x 69-7/8 x 27-5/32
Net Weight (lbs.)	225
Shipping Weight (lbs.)	265

Heat Pump Fan:

Type	Propeller
Quantity	1
Motor/Drive	Brushless Digitally Controlled/Direct

Notes:

1. Acceptable operating voltage: 176V ~ 276V.
2. Power wiring size must comply with the applicable local and national codes.
3. Sound pressure levels are tested in an anechoic chamber under Northern Climate Specification (NEEA) Version 6.0 Appendix D: Sound Pressure Measurement Test Method.
4. Must follow installation instructions in the applicable LG installation manual.
5. Qualifies under NEEA tier 4.

EcoPort is a registered trademark of OpenADR Alliance.
For a complete list of available accessories, contact your LG representative.
For continual product development, LG reserves the right to change specifications without notice.

© LG Electronics U.S.A., Inc., Englewood Cliffs, NJ. All rights reserved. "LG Life's Good" is a registered trademark of LG Corp. /www.lghvac.com

Job Name/Location:_____

APHWC501D

58 Gal. Heat Pump High-Efficiency Electric Water Heater

With Demand Response Ready

Tag No.: _____

Date: _____

PO No.: _____

Unit: Inch (mm)

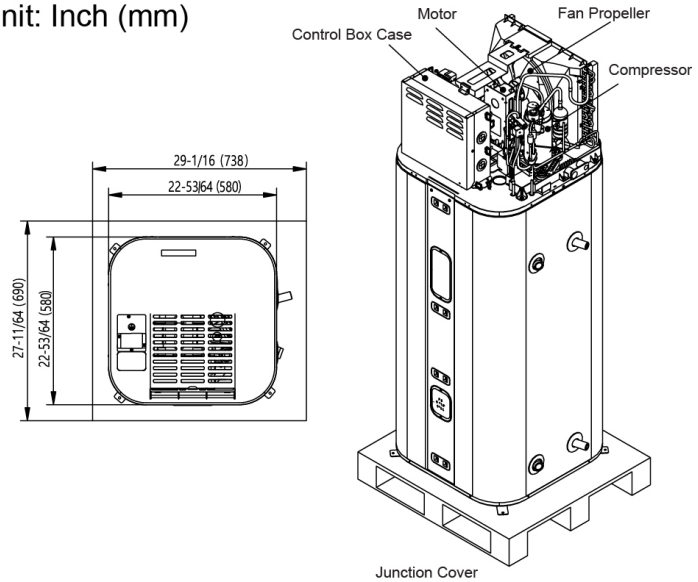

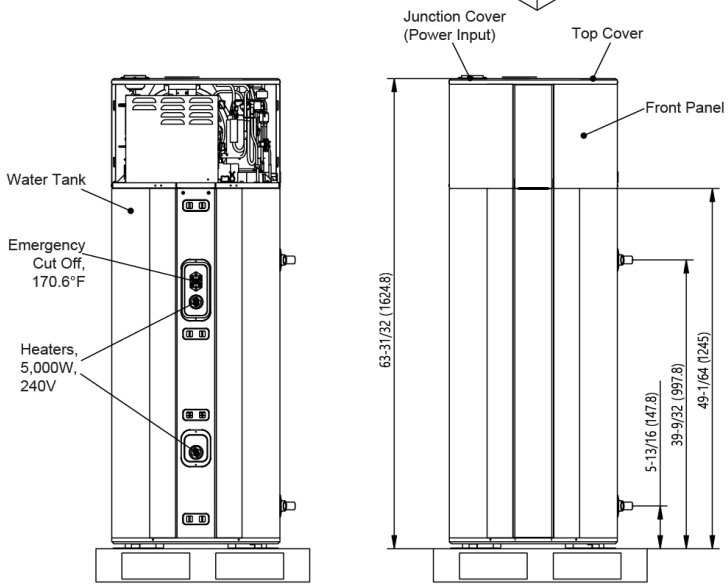

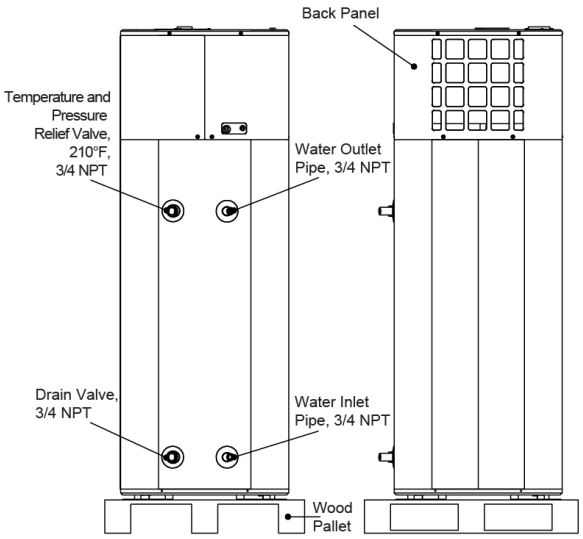

Notes:

1. Unit must be installed in compliance with the installation manual.
2. Unit must be grounded in accordance with the local or state regulations and applicable national codes.
3. All field-supplied electrical components and materials must comply with the local, state, and national codes.
4. Electrical characteristics must be considered for electrical work and design. The capacity of the power wiring and circuit breaker for the unit must follow local, state, national, and manufacturer requirements.

For continual product development, LG reserves the right to change specifications without notice.
© LG Electronics U.S.A., Inc., Englewood Cliffs, NJ. All rights reserved. "LG Life's Good" is a registered trademark of LG Corp. /www.lghvac.com