Job Name/Location: **Tag #:**

Date:

PO No.:

For: ☐ File ☐ Resubmit ☐ Approval ☐ Other _____

Architect: GC:

Engr: Mech:

Rep:
(Company) (Project Manager)

ABDAMA0

Vertical Installation Conversion Kit

for Mid Static Ducted MA Chassis Indoor Units

Compatibility:

All Mid Static Ducted MA Chassis Indoor Units
- Single Zone
- Multi F
- Multi V

Unit Data:

Net Weight	4.41
Shipping Weight (lbs)	5.51

1	Vertical drain pan assembly		1 EA
2	Mesh, Metal		1 EA
3	Bush		4 EA
4	Washer		4 EA
5	Nut (M10)		4 EA
6	Screw (D4, L10)		5 EA
7	Terminal to short CN_FLOAT		1 EA
8	Terminal to suppress CN_D_PUMP		1 EA
9	Manual, Installation		1 EA
10	Label, Caution		2 EA

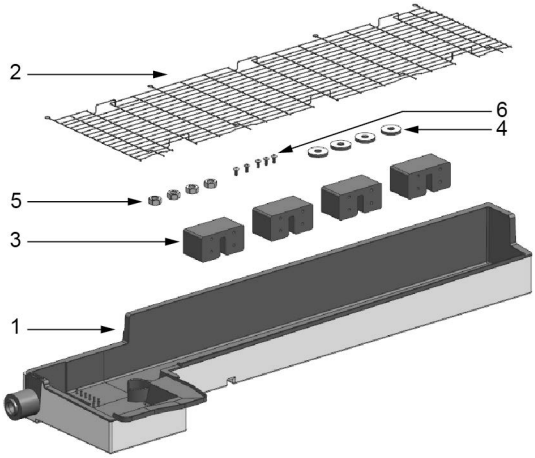

Case 1: Floor Installation

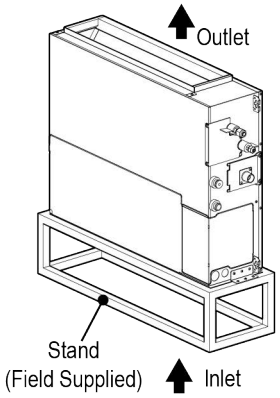

Case 2: Wall Installation

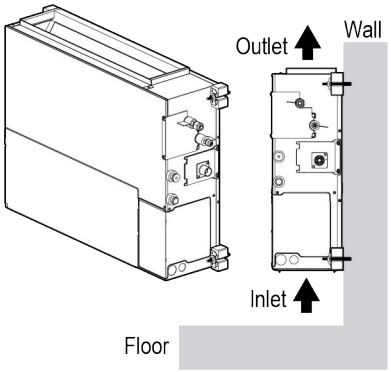

Notes:

1.Must follow installation instructions in the applicable LG installation manual.

For continual product development, LG reserves the right to change specifications without notice.
LG Electronics U.S.A., Inc., Englewood Cliffs, NJ. All rights reserved. "LG Life's Good" is a registered trademark of LG Corp. /www.lghvac.com