Job Name/Location: **Tag No.:**

Date:

For: ☐ File ☐ Resubmit ☐ Approval ☐ Other_____

PO No.:

Architect: **GC:**

Engr: **Mech:**

Rep:
(Company) (Project Manager)

ZRNU483M3AA

R32 Multi V™ Mid Static Ducted

48,100 Btu/h Indoor Unit

Performance:

Total Cooling Capacity (Btu/h)[1]	48,100
Heating Capacity (Btu/h)[1]	54,200
Max Power Input (W)[2]	650
H/M/L Power Input at Factory Default (W)	172 / 102 / 75

Rated capacity is certified under the latest AHRI Standard 1230. Ratings are subject to change without notice. Current and past certified ratings are available at https://www.ahridirectory.org/

Electrical:

Power Supply (V/Hz/Ø)	208-230 / 60 / 1
Rated Amps (A)	2.5

Piping:

Refrigerant:

Liquid Line (in., O.D.)	3/8 Flare
Vapor Line (in., O.D.)	5/8 Flare

Condensate:

Condensate Pump Drain[3] (in, I.D.)	1 Plain
Gravity Drain Plugged (in, O.D.)	1 (3/4 MPT)

Controls Features:

- Auto changeover (Heat Recovery only)
- Auto operation
- Auto restart
- Dual thermistor control
- Dual setpoint control
- Timer (on/off)
- Weekly schedule
- Fan speed control
- Filter life display
- Multiple auxiliary heater applications
- Child lock
- Group control
- Hot start
- Self diagnostics
- External on/off control
- Wi-Fi compatible
- Auto fan
- R32 leak detection sensor

Optional Accessories:

☐ Auxiliary Heater Kit[4] - PRARH1
☐ Wi-Fi Module - PWFMDD200
☐ High Efficiency Filter Box - ZFBXM301A

Controller Options:

☐ MultiSITE™ CRC2* Controllers
☐ Simple Remote Controllers
☐ Standard III Remote Controllers
☐ Deluxe Remote Controllers
☐ Remote Temperature Button Sensor
☐ Dry Contacts

Entering Mixed Air:

Cooling Maximum[1] (°F WB)	76
Heating Minimum (°F DB)	59

Unit Data:

Refrigerant Type	R32
Refrigerant Control	EEV
Sound Pressure[5] dB(A) (H/M/L,@0.24 ESP)	42 / 39 / 37
Sound Power[6] dB(A) (H/M/L,@0.24 ESP)	67 / 64 / 62
Filter Type	Washable
Filter Quantity	2
Filter Dimensions[7] (in)	13-1/4 x 23-15/16 x 3/16
Unit Net / Shipping Weight (lbs.)	93.7 / 105.4

Fan:

Fan Type / Quantity	Sirocco / 2
Motor/Drive	Brushless Digitally Controlled/Direct
Motor Quantity	1
Factory Set External Static Pressure (ESP)[8] (in wg)	0.24
Factory Set Airflow Rate H/M/L (CFM)	1,482 / 1,191 / 918
Minimum ESP (in wg)[9]	0.16
Maximum ESP (in wg)[9]	0.79

Notes:

1. See Engineering Manual for sensible and latent capacities.
2. Maximum power input is rated at maximum setting value.
3. Maximum lift is 27 in. from bottom of unit. Check valve not included (field supplied).
4. If a Third-Party Dry Contact and an LG internal heater or an LG Auxiliary Heater Kit is installed, supplemental heat capability cannot be controlled by the Third-Party Thermostat.
5. Sound Pressure levels are tested in an anechoic chamber under ISO Standard 3745.
6. Sound Power levels are tested in a reverberation chamber under ISO Standard 3741.
7. Actual filter sizes may vary.
8. At factory fan speed setting.
9. Maximum static pressure may result in reduced airflow (CFM).
10. Communication cable between (main) outdoor unit to indoor units/ heat recovery units to be 18 AWG, 2-conductor, twisted, stranded, shielded. Ensure the communication cable shield is properly grounded to the (main) outdoor unit chassis only. ⊘ DO NOT ground the outdoor unit to indoor units / heat recovery units communication cable at any other point. Wiring must comply with all applicable local and national codes.
11. Power wiring is field provided, and must comply with the applicable local and national codes.
12. This unit comes with a dry nitrogen charge.
13. All capacities are net with a combination ratio between 95 – 105%.
14. Must follow installation instructions in the applicable LG installation manual.

Inverter

C US

For a complete list of available accessories, contact your LG representative.
For continual product development, LG reserves the right to change specifications without notice.

© LG Electronics U.S.A., Inc., Englewood Cliffs, NJ. All rights reserved. "LG Life's Good" is a registered trademark of LG Corp. /www.lghvac.com

Job Name/Location: _____

ZRNU483M3AA

R32 Multi V™ Mid Static Ducted

48,100 Btu/h Indoor Unit

Tag No.: _____

Date: _____

PO No.: _____

[Unit: inch]

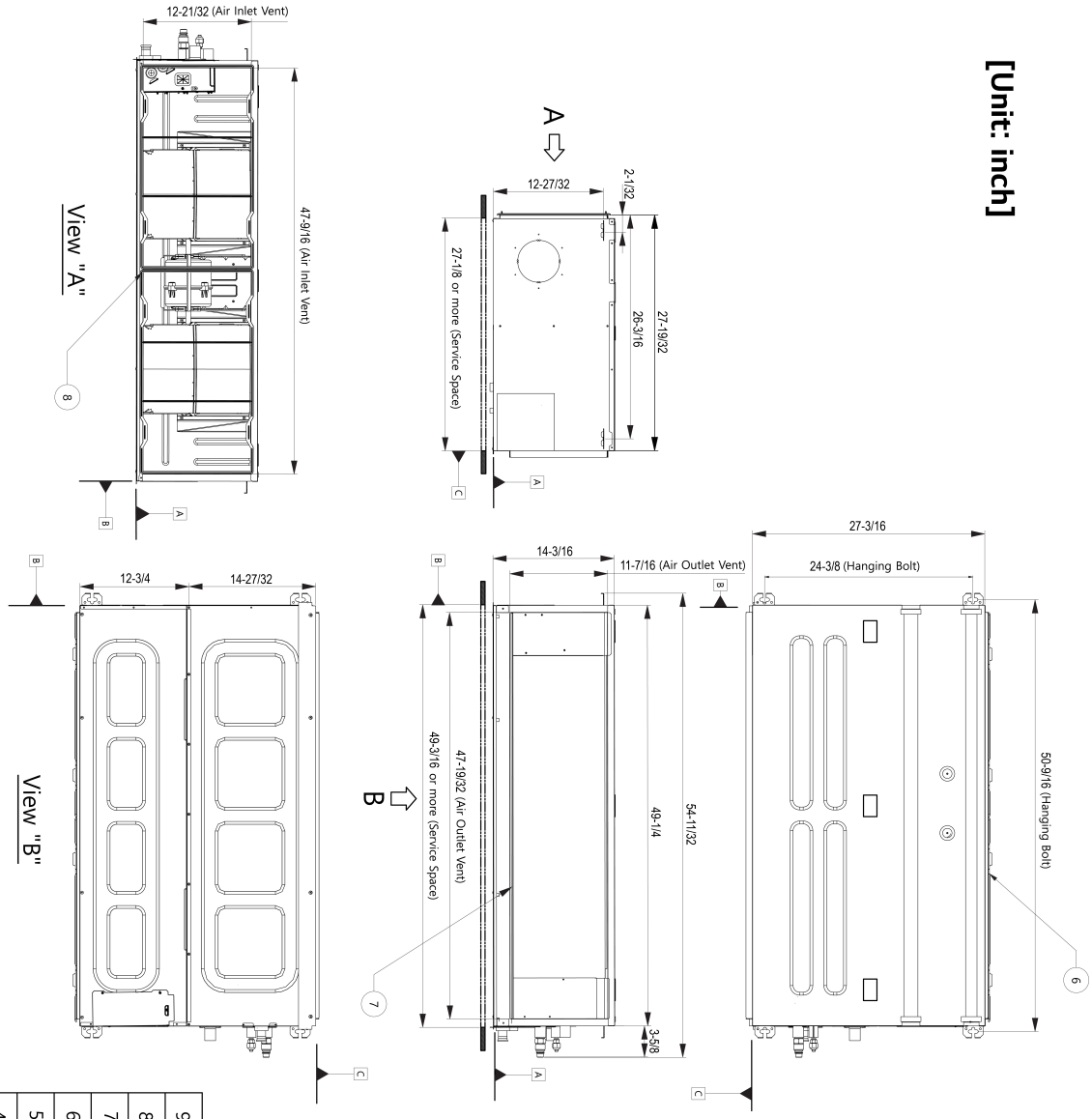

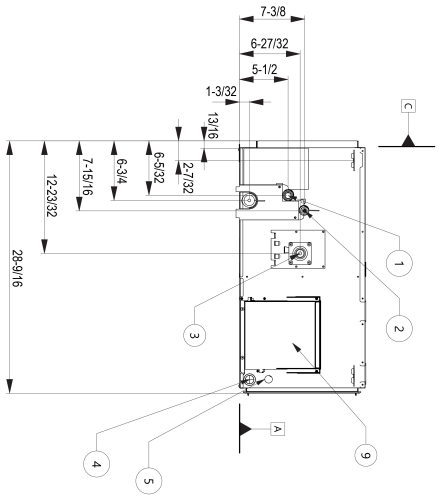

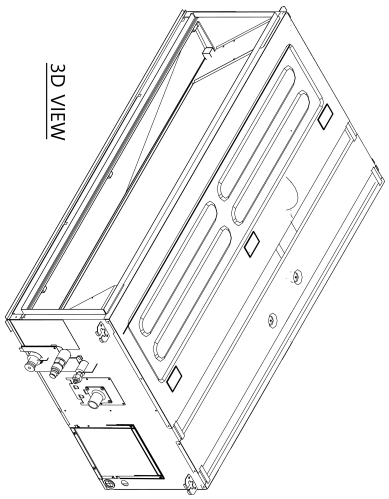

No.	Part Name	Description
9	Control Cover	-
8	Air Filters	Supplied with product
7	Air Outlet	-
6	Air Inlet	-
5	Power Cable Hole	-
4	Remote and Communication Cable Hole	-
3	Drain pipe connection	-
2	Liquid pipe connection	-
1	Gas pipe connection	-

For continual product development, LG reserves the right to change specifications without notice.
© LG Electronics U.S.A., Inc., Englewood Cliffs, NJ. All rights reserved. "LG Life's Good" is a registered trademark of LG Corp. /www.lghvac.com