TBB35394101(1/2)

이 도면은 LG전자의 독자적인 기술로 귀하의 귀중한 자산입니다. 무단 복제 및 타인에 공개를 금합니다.
Privileged & Confidential by LG Electronics

치수구분 DIMENSION CLASSIFICATION		J	K	L	M	N	면취 CHAMFERING JKL	면취 CHAMFERING MN	경사
일반 치수 허용 TOLERANCE	6 or less	0.05	0.2	0.3	0.5	0.7	F	0°	
	over 6 - 30 or less	0.1	0.3	0.5	0.8	1.2			
	30 - 150	0.2	0.4	0.6	1.1	2.0	30°	2°	
	150 - 250	0.3	0.6	0.8	1.4	2.5			
	250 - 300	0.4	0.8	1.0	1.7	3.5	15°	F	
	300 - 500	0.6	1.2	1.5	2.0	4.5			
	500 over	0.8	1.6	2.0	2.5	6	5°	30°	

01 Work - M3 Chassis - Ceiling Concealed Duct(Middle Static) - with Drain Pump - Global

[Unit: mm]
Chassis code : M3
DWG. No : TBB35394101_Rev.02

Model : KNSJB421A, KNSJB481A

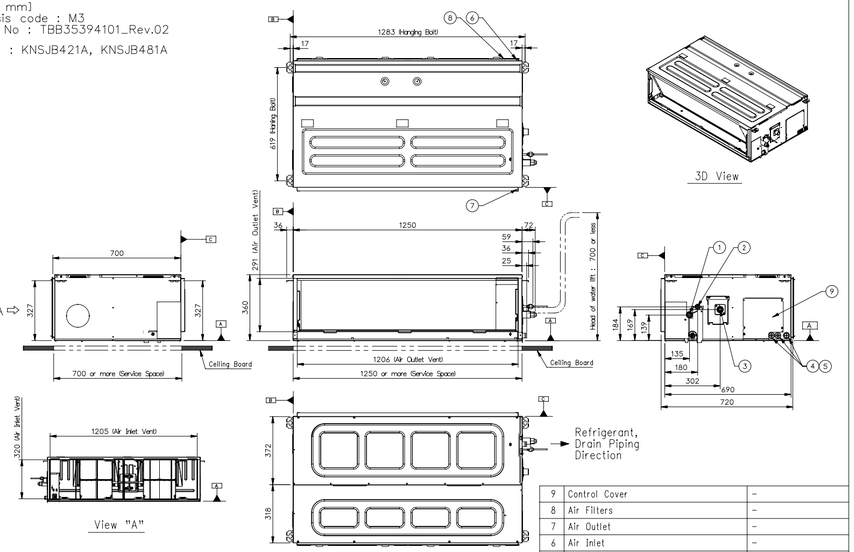

No.	Part Name	Description
9	Control Cover	-
8	Air Filters	-
7	Air Outlet	-
6	Air Inlet	-
5	Remote Controller Cable Hole	-
4	Power and communication Cable Hole	-
3	Drain pipe connection	with Drain Pump
2	Liquid pipe connection	Flare Connection
1	Gas pipe connection	Flare Connection

Symbols

- Datum line
- View Direction
- Refrigerant/Drain Piping Direction

Note

1. Unit should be installed in compliance with the installation manual in the product box.
2. Unit should be grounded in accordance with the local regulations or applicable national codes.
3. All electrical components and materials to be supplied from the site must comply with the local regulations or international codes.

기호 SYM.	변 경 내 용 REVISION	사양번호 ECO. NO.	년 월 일 DATE	사명 SIGNED
A	이작업 결와 단위 추가	EAB06600254	2024-06-19	박현희
2				
3				
4				
5				
6				

승인 APPROVAL

고객(제작)사 Maker | 양산처 Manufacturer

LG 전자

차종/3D데이터 확인 Confirm

UNITS	mm	SCALE	N/S
DRW/DSN	22/09/14	박현희	
CHKD	22/09/19	이정석	
CHKD	22/09/19	홍상택	
APPD	22/09/20	최병수	

RELATION C.NO

TITLE: Ceiling Duct, In MODEL NAME

DWG. 도번: TBB35394101(1/2)

TBB35394101(2/2)

이 도면은 LG전자의 독자적인 기술로 귀하의 귀중한 자산입니다. 무단 복제 및 타인에 공개를 금합니다.
Privileged & Confidential by LG Electronics

치수구분 DIMENSION CLASSIFICATION		J	K	L	M	N	면취 CHAMFERING JKL	면취 CHAMFERING MN	경사
일반 치수 허용 TOLERANCE	6 or less	0.05	0.2	0.3	0.5	0.7	F	0°	
	over 6 - 30 or less	0.1	0.3	0.5	0.8	1.2			
	30 - 150	0.2	0.4	0.6	1.1	2.0	30°	2°	
	150 - 250	0.3	0.6	0.8	1.4	2.5			
	250 - 300	0.4	0.8	1.0	1.7	3.5	15°	F	
	300 - 500	0.6	1.2	1.5	2.0	4.5			
	500 over	0.8	1.6	2.0	2.5	6	5°	30°	

01 Work - M3 Chassis - Ceiling Concealed Duct(Middle Static) - with Drain Pump - Global

[Unit: inch]
Chassis code : M3
DWG. No : TBB35394101_Rev.02

Model : KNSJB421A, KNSJB481A

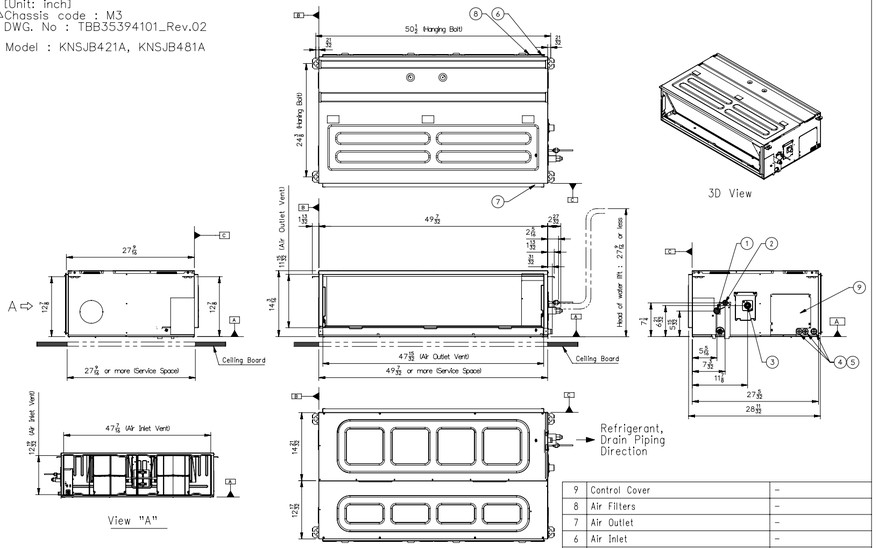

No.	Part Name	Description
9	Control Cover	-
8	Air Filters	-
7	Air Outlet	-
6	Air Inlet	-
5	Remote Controller Cable Hole	-
4	Power and communication Cable Hole	-
3	Drain pipe connection	with Drain Pump
2	Liquid pipe connection	Flare Connection
1	Gas pipe connection	Flare Connection

Symbols

- Datum line
- View Direction
- Refrigerant/Drain Piping Direction

Note

1. Unit should be installed in compliance with the installation manual in the product box.
2. Unit should be grounded in accordance with the local regulations or applicable national codes.
3. All electrical components and materials to be supplied from the site must comply with the local regulations or international codes.

기호 SYM.	변 경 내 용 REVISION	사양번호 ECO. NO.	년 월 일 DATE	사명 SIGNED
A				
2				
3				
4				
5				
6				

승인 APPROVAL

고객(제작)사 Maker | 양산처 Manufacturer

LG 전자

차종/3D데이터 확인 Confirm

UNITS	mm	SCALE	N/S
DRW/DSN	22/09/14	박현희	
CHKD	22/09/19	이정석	
CHKD	22/09/19	홍상택	
APPD	22/09/20	최병수	

RELATION C.NO

TITLE: Ceiling Duct, In MODEL NAME

DWG. 도번: TBB35394101(2/2)