Job Name/Location: **Tag No.:**

Date:

For: ☐ File ☐ Resubmit ☐ Approval ☐ Other_____

PO No.:

Architect: **GC:**

Engr: **Mech:**

Rep:
(Company) (Project Manager)

ZRNU123L2GA

R32 Multi V™ Low Static Ducted

12,300 Btu/h Indoor Unit

Performance:

Total Cooling Capacity (Btu/h)	12,300
Heating Capacity (Btu/h)	13,600
Maximum Power Input (W)[1]	85
L/M/H Power Input at Factory Default (W)	29 / 34 / 41

Rated capacity is certified under AHRI Standard 1230-2023. Ratings are subject to change without notice. Current and past certified ratings are available at www.ahridirectory.org.

Electrical:

Power Supply (V/Hz/Ø)	208-230/60/1
Rated Amps (A)	0.8

Piping:

Refrigerant:

Liquid Line (in., O.D.)	1/4 Flare
Vapor Line (in., O.D.)	3/8 Flare

Condensate:

Condensate Pump Drain[2] (in., I.D.)	1

Entering Mixed Air:

Cooling Maximum[3] (°F WB)	76
Heating Minimum (°F DB)	59

Controls Features:

- Auto changeover (Heat Recovery only)
- Auto operation
- Auto restart
- Child lock
- Dual thermistor control
- Hot start
- External on/off control
- Self diagnostics
- Timer (on/off)
- Weekly schedule
- Fan speed control
- Dual setpoint control
- Multiple auxiliary heater applications
- Filter life display
- Group control
- Wi-Fi compatible
- Auto fan
- R32 Leak detection sensor

Optional Accessories:

☐ Auxiliary Heater Kit[14] - PRARH1
☐ Wi-Fi Module - PWFMDD200

Controller Options:

☐ MultiSITE™ CRC2* Controllers
☐ Simple Remote Controllers
☐ Standard III Remote Controllers
☐ Remote Temperature Button Sensor
☐ Dry Contacts

Unit Data:

Refrigerant Type	R32
Refrigerant Control	EEV
Sound Pressure dB(A) (H/M/L)[4]	31 / 29 / 26
Sound Power dB(A)[5]	52
Filter Type	Washable
Filter Quantity	1
Filter Dimensions[6] (in.)	33-7/8 x 5-7/8 x 1/4
Net Unit Weight (lbs.)	46.1
Shipping Unit Weight (lbs.)	56.9

Fan:

Type	Sirocco
Fan Quantity	3
Motor/Drive	Brushless Digitally Controlled/Direct
Motor Quantity	1
Factory Set Airflow Rate H/M/L (CFM)	360 / 310 / 250
Factory Set External Static Pressure (ESP)[7] (in. w.g.)	0.1
Minimum ESP[8] (in. w.g.)	0
Maximum ESP[8] (in. w.g.)	0.19

Notes:

1. Maximum power input is rated at maximum setting value.
2. Maximum lift is 27 inches from bottom of unit. Check valve not included (field supplied).
3. See Engineering Manual for sensible and latent capacities.
4. Sound Pressure levels are tested in an anechoic chamber under ISO Standard 3745.
5. Sound Power level is measured using rated conditions, and tested in a reverberation room per AHRI 260.
6. Actual filter sizes may vary.
7. At factory fan speed setting.
8. Maximum static pressure may result in reduced airflow (CFM).
9. All communication cable between (main) outdoor units to indoor units / heat recovery units to be 18 AWG, 2-conductor, twisted, stranded, shielded. Ensure the communication cable shield is properly grounded to the (main) outdoor unit chassis only. Do not ground the outdoor unit to indoor units / heat recovery units communication cable at any other point. Wiring must comply with all applicable local and national codes.
10. Power wiring cable size must comply with the applicable local and national code.
11. This unit comes with a dry nitrogen charge.
12. All capacities are net with a combination ratio between 95 – 105%.
13. Must follow installation instructions in the applicable LG installation manual.
14. If a Third-Party Dry Contact and an LG internal heater or an LG Auxiliary Heater Kit is installed, supplemental heat capability cannot be controlled by the Third-Party Thermostat.

For a complete list of available accessories, contact your LG representative.
For continual product development, LG reserves the right to change specifications without notice.
© LG Electronics U.S.A., Inc., Englewood Cliffs, NJ. All rights reserved. "LG Life's Good" is a registered trademark of LG Corp. /www.lghvac.com

Job Name/Location: _____

ZRNU123L2GA

R32 Multi V™ Low Static Ducted

12,300 Btu/h Indoor Unit

LG Life's Good

Tag No.: _____

Date: _____

PO No.: _____

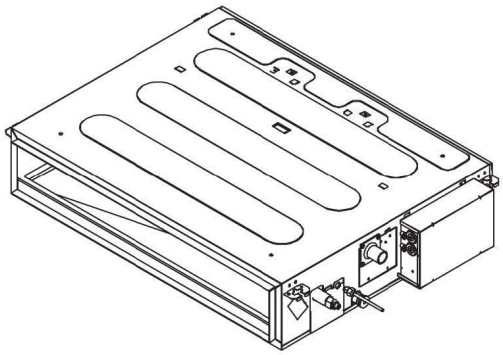

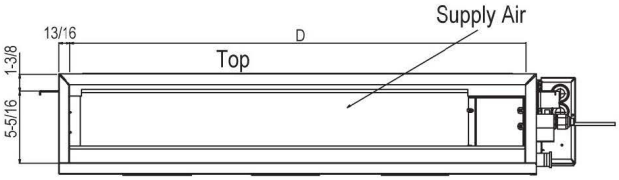

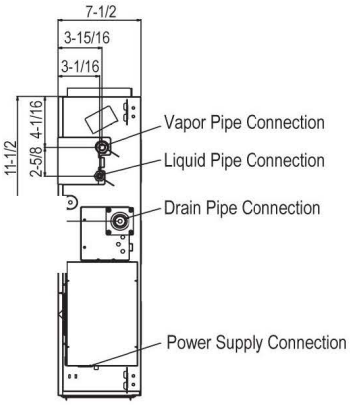

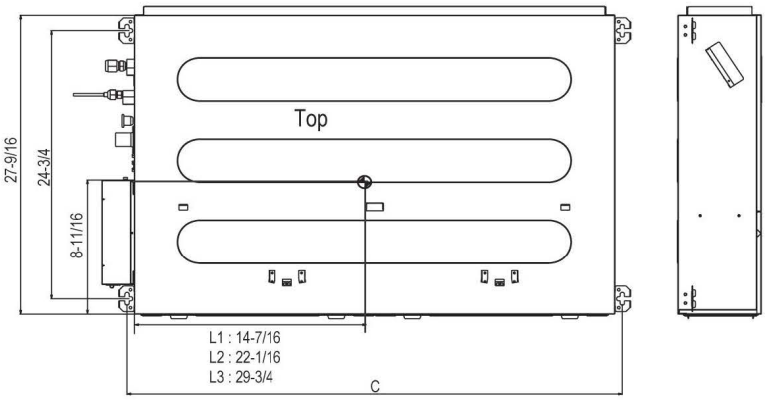

Center of Gravity

Unit: inches

Note: All measurements have a tolerance of ±1/4 in.

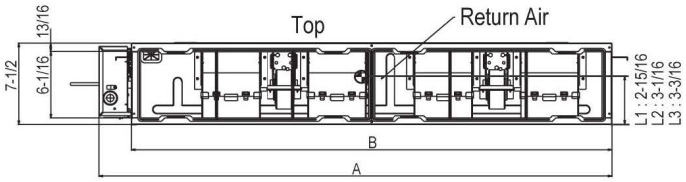

	A	B	C	D	Supply Duct Connection					Return Duct Connection				
					Type	Height	Width	Flange Width	Flange Depth	Opening Location	Height	Width	Flange Width	Flange Depth
ZRNU073L1GA ZRNU093L1GA	30-1/2	27-9/16	28-7/8	26	Flange	5-7/8	26	13/16	5/8	Rear	6-1/8	26	3/4	No Flange
										Bottom	6-1/16	26	3/4	No Flange
ZRNU123L2GA ZRNU153L2GA ZRNU183L2GA	38-3/8	35-7/16	36-3/4	33-7/8	Flange	5-7/8	33-13/16	13/16	5/8	Rear	6-1/8	33-11/16	3/4	No Flange
										Bottom	6-1/16	33-11/16	3/4	No Flange
ZRNU243L3GA	46-1/4	43-5/16	44-5/8	41-3/4	Flange	5-7/8	41-3/4	13/16	5/8	Rear	6-1/8	41-11/16	3/4	No Flange
										Bottom	6-1/16	41-11/16	3/4	No Flange

For continual product development, LG reserves the right to change specifications without notice.
© LG Electronics U.S.A., Inc., Englewood Cliffs, NJ. All rights reserved. "LG Life's Good" is a registered trademark of LG Corp. /www.lghvac.com