Job Name/Location: **Tag #:**

Date:

PO No.:

For: ☐ File ☐ Resubmit ☐ Approval ☐ Other_____

Architect: GC:

Engr: Mech:

Rep:
(Company) (Project Manager)

ZCPE03050DB
Power Exhauster, Dry Bulb Modulating
for Split Rooftop Unit

LG Life's Good

Unit Data:

Net Weight (lbs)	222
Voltage/Phase	208/1
FLA	3.0
MCA	3.75
MOP	6.75
Fan HP	1/2

Compatible Models:

- ARNU363DDA4
- ARNU483DDA4
- ARNU603DDA4
- ARNU723DDA4

Standard Features:

- Convertible for horizontal or vertical airflow
- Class 1A outside air and return air dampers
- Exhaust damper
- DWDI Forward Curve Centrifugal Fan, belt driven
- Thermal overload protected motor
- Variable frequency drive with differential pressure switch
- Painted Cabinet with intake hood/water entrainment filter
- Honeywell Jade™ Controller (complies with California Title 24) shipped loose for field mounting inside Split RTU cabinet
- Outside air dry bulb temperature sensor
- Mixed Air Temperature (MAT) sensor shipped loose for field mounting inside Split RTU cabinet
- 24 Volt damper actuator (communicating type)
- Wiring harness (for field installation)

Notes:

1.Dry Contact for Economizer (purchased separately) required as follows:
- PDRYCB400 when using LG Thermostat
- PDRYCB320 when using 3rd Party Thermostat

2.Separate power required for this power exhauster.

AMCA RATED CLASS 1A LEAKAGE RATED HIGH PERFORMANCE DAMPER ONE-PIECE AIRFOIL BLADE FOR LOW PRESSURE DROP

LG Electronics U.S.A., Inc., Englewood Cliffs, NJ. All rights reserved. "LG Life's Good" is a registered trademark of LG Corp. /www.lghvac.com

Job Name/Location:

ZCPE03050DB

Power Exhauster, Dry Bulb Modulating

for Split Rooftop Unit

LG Life's Good

Tag #:

Date:

PO No.:

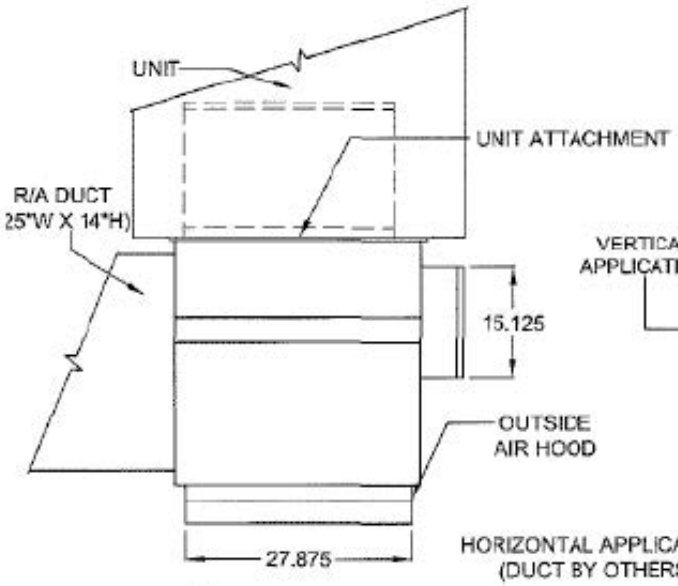

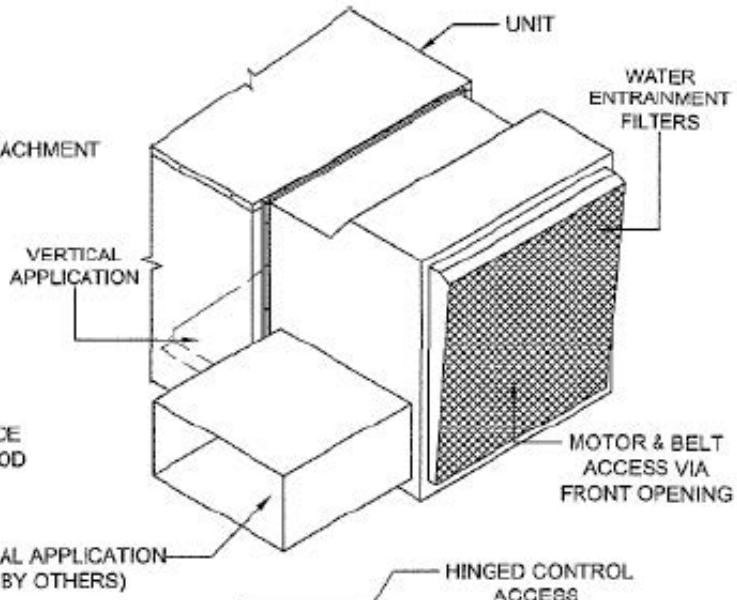

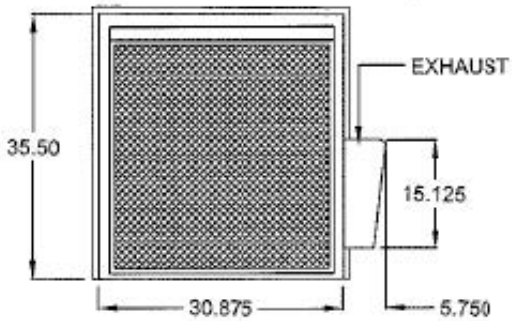

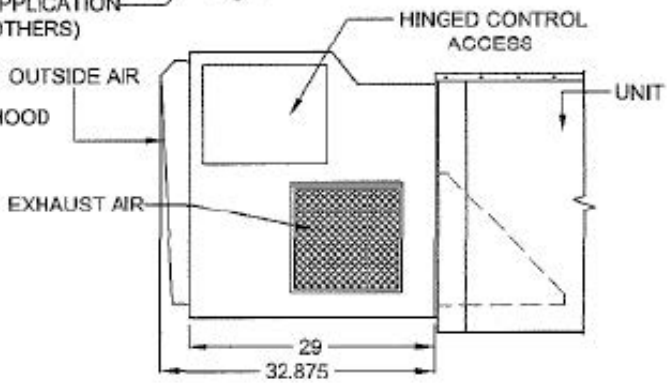

SERVICE CLEARANCES

SERVICE AREA NOT DRAWN TO SCALE.

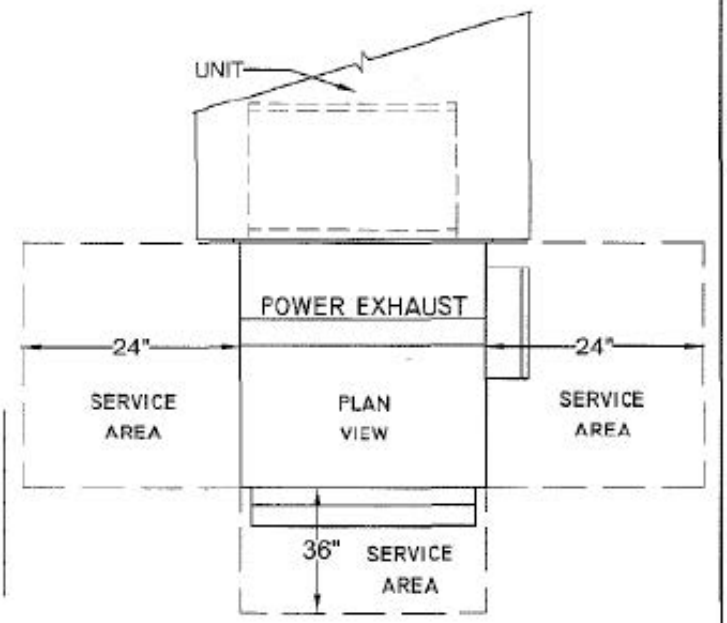

LG Electronics U.S.A., Inc., Englewood Cliffs, NJ. All rights reserved. "LG Life's Good" is a registered trademark of LG Corp. /www.lghvac.com

Job Name/Location:

ZCPE03050DB

Power Exhauster, Dry Bulb Modulating

for Split Rooftop Unit

LG Life's Good

Tag #:

Date:

PO No.:

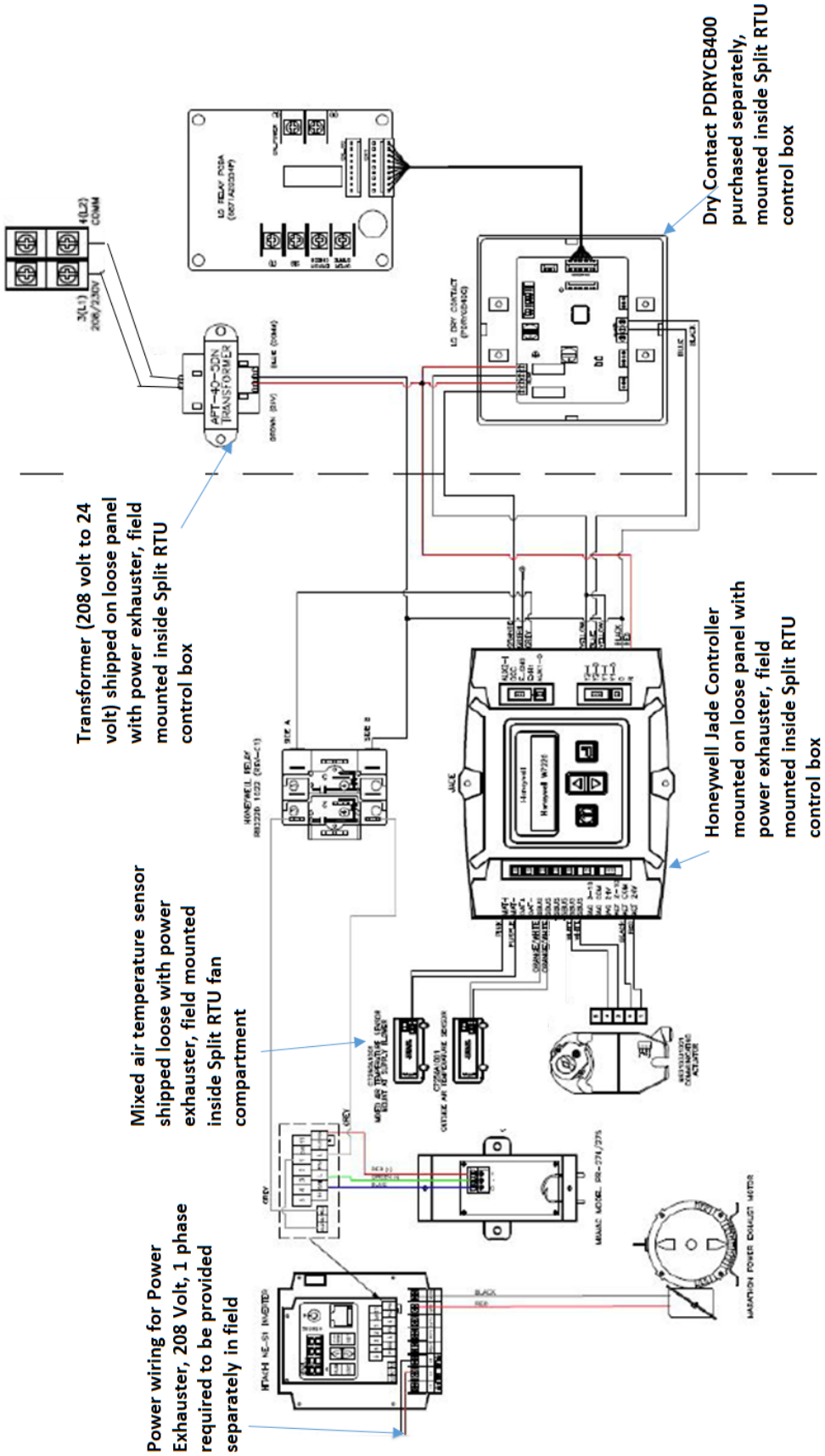

LG Electronics U.S.A., Inc., Englewood Cliffs, NJ. All rights reserved. "LG Life's Good" is a registered trademark of LG Corp. /www.lghvac.com