APHWC501D Heat Pump Water Heater with Demand Response Ready Dimensions.

Unit: Inch (mm)

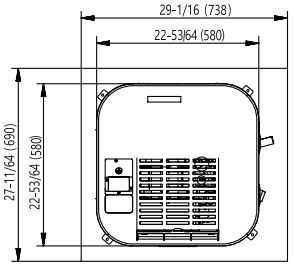


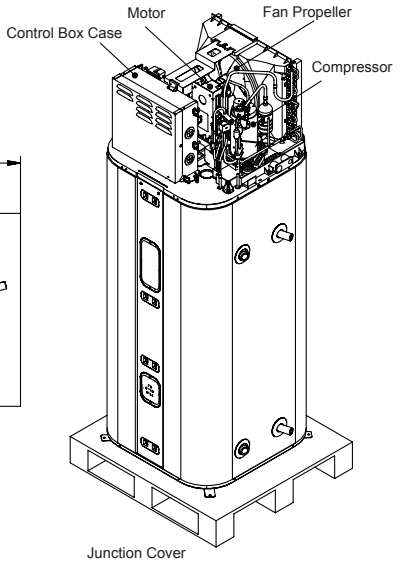


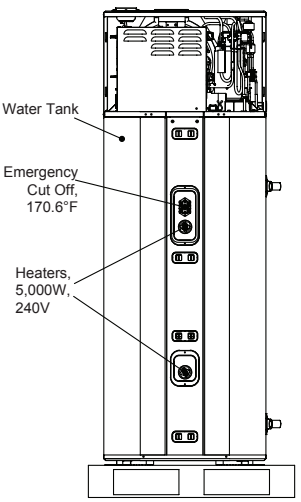


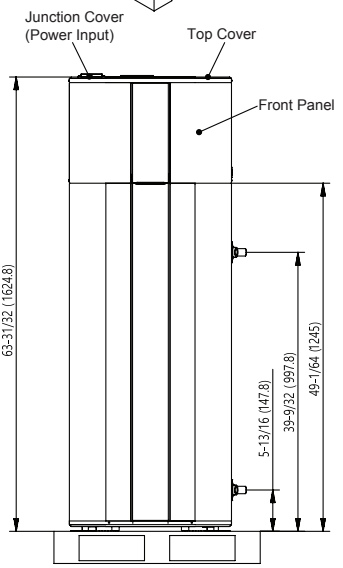


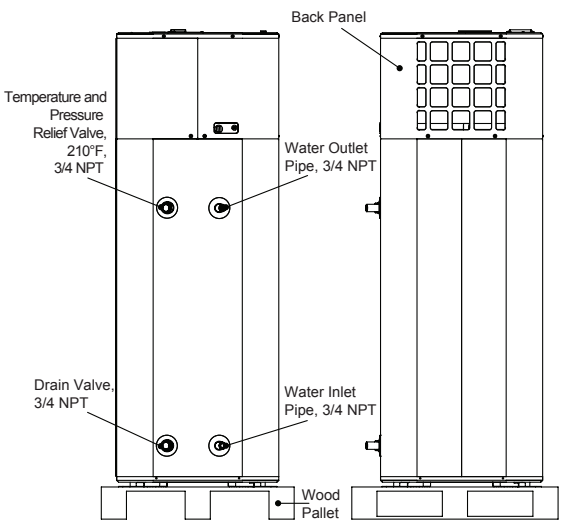


**Notes:**

1. Unit must be installed in compliance with the installation manual.
2. Unit must be grounded in accordance with the local or state regulations and applicable national codes.
3. All field-supplied electrical components and materials must comply with the local, state, and national codes.
4. Electrical characteristics must be considered for electrical work and design. The capacity of the power wiring and circuit breaker for the unit must follow local, state, national, and manufacturer requirements.