TBA365886 (1/2)

This drawing is the property of LGE, and it is protected by the concerned laws and regulation.

01 Work – TP-B Chassis – Ceiling Cassette Type – Common – Domestic

[Unit: mm]
Model : KNSCB241A

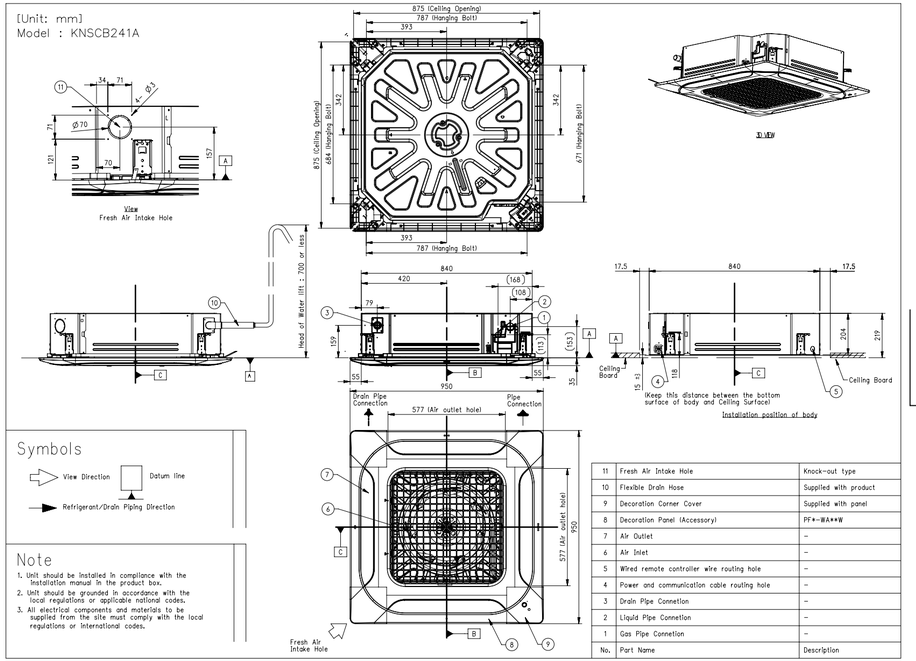

Symbols

View Direction
Datum line
Refrigerant/Drain Piping Direction

Note

1. Unit should be installed in compliance with the installation manual in the product box.
2. Unit should be grounded in accordance with the local regulations or applicable national codes.
3. All electrical components and materials to be supplied from the site must comply with the local regulations or International codes.

Note for PDB of indoor unit

Note

1. Unit should be installed in compliance with the installation manual in the product box.
2. Unit should be grounded in accordance with the local regulations or applicable national codes.
3. All electrical components and materials to be supplied from the site must comply with the local regulations or International codes.

Tolerance Grade		Length(mm)							
Mark	Classification	0.5~3	3~6	6~30	30~120	120~400	400~1000	1000~2000	2000~4000
F	Fine (K+5Grade)	0.05	0.05	0.1	0.15	0.2	0.3	0.5	-
M	Medium (K+0Grade)	0.1	0.1	0.2	0.3	0.5	0.8	1.2	2.0
C	Coarse (K-1Grade)	0.2	0.3	0.5	0.8	1.2	2.0	3.0	4.0
V	Very Coarse (K-3Grade)	-	0.5	1.0	1.5	2.5	4.0	6.0	8.0
Tolerance Grade		Round/Chamfer(mm)		Angle (+Degree' Minute' Second')					
Mark	Classification	0.5~3	3~6	6~	~10	10~50	50~120	120~400	400~
F	Fine (K+5Grade)	0.2	0.5	1.0	1°	30'	20'	10'	5'
M	Medium (K+0Grade)	0.2	0.5	1.0	1°	30'	20'	10'	5'
C	Coarse (K-1Grade)	0.4	1.0	2.0	1°30'	1°	30'	15'	10'
V	Very Coarse (K-3Grade)	0.4	1.0	2.0	3°	2°	1°	30'	20'

No.	Part Name	Description
11	Fresh Air Intake Hole	Knock-out type
10	Flexible Drain Hose	Supplied with product
9	Decoration Corner Cover	Supplied with panel
8	Decoration Panel (Accessory)	PF*-WA**W
7	Air Outlet	–
6	Air Inlet	–
5	Wired remote controller wire routing hole	–
4	Power and communication cable routing hole	–
3	Drain Pipe Connetion	–
2	Liquid Pipe Connetion	–
1	Gas Pipe Connetion	–

SYM.	REVISION	ECO. NO.	DATE	SIGNED
1	이전정 글이 단위 내용 추가 (Inch 내용 추가)	EAB0600254	2024.06.19	백해리
2				
3				
4				
5				
6				

CONSENT	R/LIBRARY CHECKED	UNIT	mm	SCALE	N/S
		DESIGNED	REVIEWED	CHECKED	APPROVED
DIE MAKER	MANUFACTURER	19/03/29 김하나			19/03/31 오재현
		LG Electronics			RELATED DWG.

TITLE: Ceiling Cassette, In Model Name

DWG. NO.: TBA365886 (1/2)

TBA365886 (2/2)

This drawing is the property of LGE, and it is protected by the concerned laws and regulation.

01 Work – TP-B Chassis – Ceiling Cassette Type – Common – Domestic

[Unit: inch]
Model : KNSCB241A

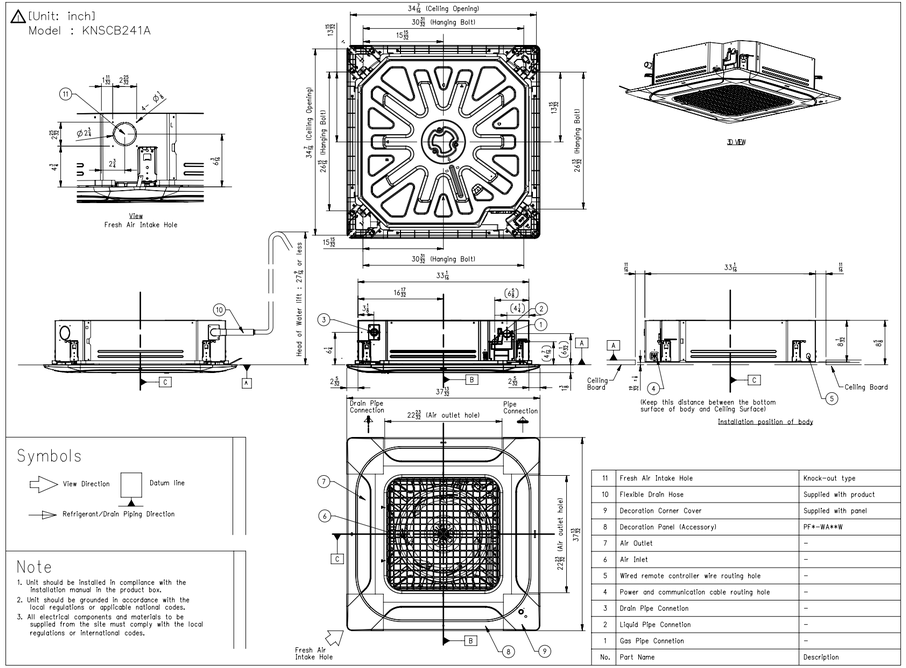

Symbols

View Direction
Datum line
Refrigerant/Drain Piping Direction

Note

1. Unit should be installed in compliance with the installation manual in the product box.
2. Unit should be grounded in accordance with the local regulations or applicable national codes.
3. All electrical components and materials to be supplied from the site must comply with the local regulations or International codes.

Note for PDB of indoor unit

Note

1. Unit should be installed in compliance with the installation manual in the product box.
2. Unit should be grounded in accordance with the local regulations or applicable national codes.
3. All electrical components and materials to be supplied from the site must comply with the local regulations or International codes.

Tolerance Grade		Length(mm)							
Mark	Classification	0.5~3	3~6	6~30	30~120	120~400	400~1000	1000~2000	2000~4000
F	Fine (K+5Grade)	0.05	0.05	0.1	0.15	0.2	0.3	0.5	-
M	Medium (K+0Grade)	0.1	0.1	0.2	0.3	0.5	0.8	1.2	2.0
C	Coarse (K-1Grade)	0.2	0.3	0.5	0.8	1.2	2.0	3.0	4.0
V	Very Coarse (K-3Grade)	-	0.5	1.0	1.5	2.5	4.0	6.0	8.0
Tolerance Grade		Round/Chamfer(mm)		Angle (+Degree' Minute' Second')					
Mark	Classification	0.5~3	3~6	6~	~10	10~50	50~120	120~400	400~
F	Fine (K+5Grade)	0.2	0.5	1.0	1°	30'	20'	10'	5'
M	Medium (K+0Grade)	0.2	0.5	1.0	1°	30'	20'	10'	5'
C	Coarse (K-1Grade)	0.4	1.0	2.0	1°30'	1°	30'	15'	10'
V	Very Coarse (K-3Grade)	0.4	1.0	2.0	3°	2°	1°	30'	20'

No.	Part Name	Description
11	Fresh Air Intake Hole	Knock-out type
10	Flexible Drain Hose	Supplied with product
9	Decoration Corner Cover	Supplied with panel
8	Decoration Panel (Accessory)	PF*-WA**W
7	Air Outlet	–
6	Air Inlet	–
5	Wired remote controller wire routing hole	–
4	Power and communication cable routing hole	–
3	Drain Pipe Connetion	–
2	Liquid Pipe Connetion	–
1	Gas Pipe Connetion	–

SYM.	REVISION	ECO. NO.	DATE	SIGNED
1				
2				
3				
4				
5				
6				

CONSENT	R/LIBRARY CHECKED	UNIT	mm	SCALE	N/S
		DESIGNED	REVIEWED	CHECKED	APPROVED
DIE MAKER	MANUFACTURER	19/03/29 김하나			19/03/31 오재현
		LG Electronics			RELATED DWG.

TITLE: Ceiling Cassette, In Model Name

DWG. NO.: TBA365886 (2/2)