Job Name/Location: **Tag No.:**

Date:

For: ☐ File ☐ Resubmit ☐ Approval ☐ Other _____

PO No.:

Architect: **GC:**

Engr: **Mech:**

Rep:
(Company) (Project Manager)

KNMLB181A
R32 Multi F Multi-Position Air Handling Unit
18,000 Btu/h Indoor Unit

Performance:

Nominal Cooling Capacity (Btu/h)	18,000
Nominal Heating Capacity (Btu/h)	20,000

Cooling Nominal Test Conditions:
Indoor: 80°F DB / 67°F WB
Outdoor: 95°F DB / 75°F WB

Heating Nominal Test Conditions:
Indoor: 70°F DB / 60°F WB
Outdoor: 47°F DB / 43°F WB

Electrical:

Power Supply (V/Hz/Ø)[1,2]	208-230 / 60 / 1
Rated Amps (A)	2.6

Piping:

Installed Liquid Pipe (in., O.D.)	1/4 Flare
Installed Vapor Pipe (in., O.D.)	1/2 Flare
Liquid Connection (in., O.D.)	1/4 Flare
Vapor Connection (in., O.D.)	1/2 Flare
Drain (in., O.D. / I.D.)	3/4 FPT
Temperature Sensor	Thermistor

Standard Features:

- Access Panel for Field Supplied Air Filter

Controls Features:

- Inverter (variable speed fan)
- Hot start
- Self diagnosis
- Soft dry operation
- Auto operation
- Auto restart
- Sleep mode
- Timer (on/off/weekly)
- R32 leak detection sensor
- ECM fan provides constant airflow regardless of permitted ESP

Optional Accessories:

☐ Single-Port Shutoff Valve - PRHPZ010A
☐ Auxiliary Heater Kit - PRARH1[4]
☐ Electric Heater Kits - ANEHxx3Cx[5]
☐ Downflow Conversion Kit - PNDFA0
☐ Wi-Fi Module - PWFMDD200
☐ R32 Alarm Kit - PLDCAA0S

Controller Options:

☐ MultiSITE™ CRC* Controllers
☐ Simple Remote Controllers
☐ Standard III Remote Controllers
☐ Deluxe Remote Controller
☐ Wireless Remote Controller[6]
☐ Remote Temperature Button Sensor
☐ Dry Contacts

Entering Mixed Air:

Cooling (°F WB)	57 ~ 77
Heating (°F DB)	59 ~ 81

Unit Data:

Refrigerant Type	R32
Refrigerant Control	EEV
Sound Pressure (H/M/L) dB(A)[3]	35 / 32 / 29
Filter Dimensions[7] (in)	16 x 20 x 1
Net Weight (lbs.)	113
Shipping Weight (lbs.)	123

Fan:

Type	Sirocco
Quantity	1
Motor/Drive	Electronically Commutated Motor (ECM)
Air Flow H/M/L (CFM)	600 / 510 / 440
Minimum~Maximum External Static Pressure (in wg)	0.1~1.0
Dehumidification (pts./hr.)	2.75

Notes:

1. Acceptable operating voltage: 187V-253V.
2. The power wiring and the communication wiring from the outdoor unit to the indoor unit, or from the branch distribution unit to the indoor unit is field supplied and must be stranded, shielded or unshielded (if shielded, it must be grounded to the chassis of the outdoor unit only). All wiring must comply with applicable local and national codes.
a. Power wiring and communication wiring from outdoor unit to indoor unit (No. x AWG) 3 x 14 / 2 x 18.
b. Power wiring and communication wiring from branch distribution unit to indoor unit (No. x AWG) 3 x 14 / 2 x 18.
3. Sound Pressure levels are tested in an anechoic chamber under ISO Standard 3745.
4. If a Third-Party Dry Contact and an LG internal heater or an LG Auxiliary Heater Kit is installed, supplemental heat capability cannot be controlled by the Third-Party Thermostat.
5. Electric heater accessory is available in 3~8kW capacities for the 12k Multi-Position Air Handling Unit (MPAHU), 3~10kW capacities for the 18/24/30k MPAHU, and 3~15kW capacities for the 36k MPAHU. Refer to the Engineering Manual for details.
6. Requires an LG wall controller because MPAHUs do not have infrared receiver.
7. Actual filter sizes may vary.
8. See Engineering Manual for sensible and latent capacities.
9. The indoor unit comes with a dry helium charge.
10. Corresponding refrigerant piping length is in accordance with standard length of each outdoor unit and the level difference is 0 ft. All capacities are net with a combination ratio between 95 - 105%.
11. Must follow installation instructions in the applicable LG installation manual.

For a complete list of available accessories, contact your LG representative.
For continual product development, LG reserves the right to change specifications without notice.
© LG Electronics U.S.A., Inc., Englewood Cliffs, NJ. All rights reserved. "LG Life's Good" is a registered trademark of LG Corp. /www.lghvac.com

Job Name/Location: _____

KNMLB181A

R32 Multi F Multi-Position Air Handling Unit

18,000 Btu/h Indoor Unit

Tag No.: _____

Date: _____

PO No.: _____

Factory Configurations

Vertical Upflow

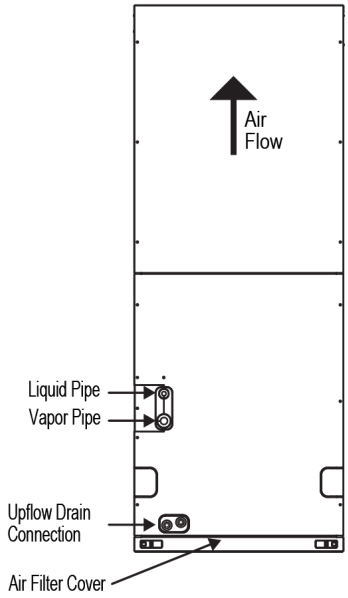

Field Configurations

Vertical Downflow

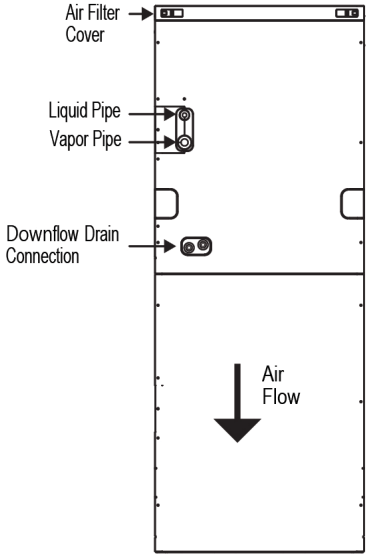

Requires vertical downflow kit

Horizontal Left

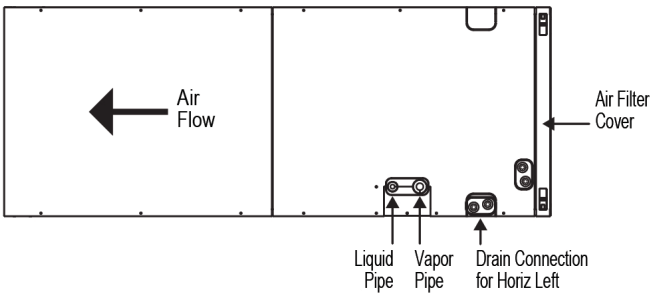

Horizontal Right

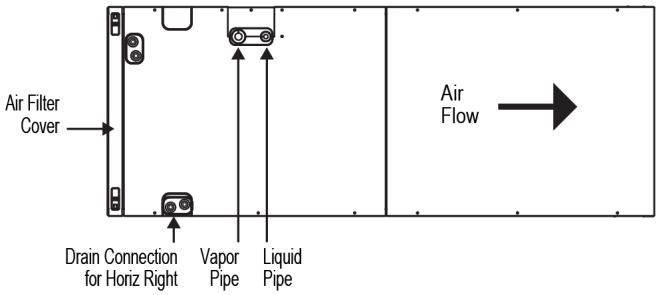

For continual product development, LG reserves the right to change specifications without notice.
© LG Electronics U.S.A., Inc., Englewood Cliffs, NJ. All rights reserved. "LG Life's Good" is a registered trademark of LG Corp. /www.lghvac.com

Job Name/Location: _____

KNMLB181A

R32 Multi F Multi-Position Air Handling Unit

18,000 Btu/h Indoor Unit

Tag No.: _____

Date: _____

PO No.: _____

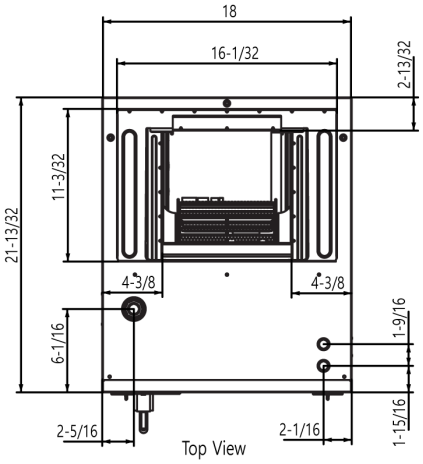

Top View

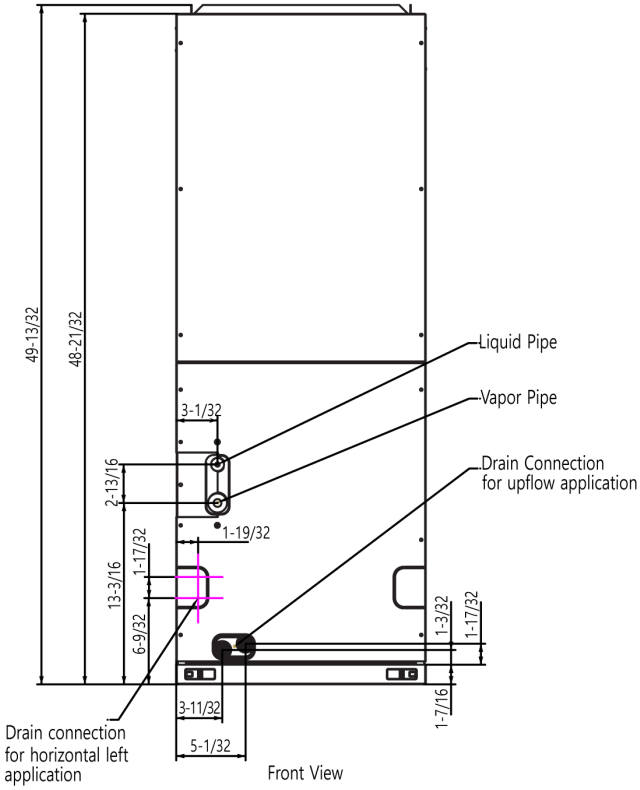

Front View

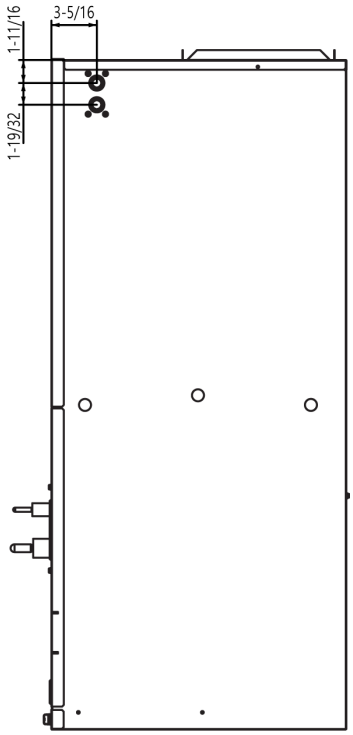

Side View

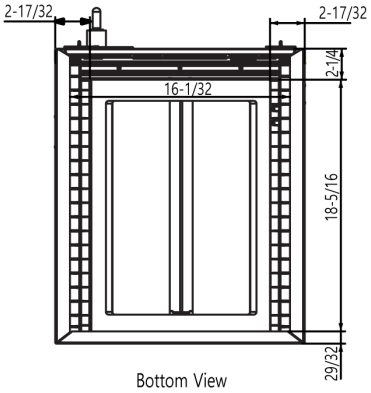

Bottom View

SB_MultiF_MultiPositionAHU_R32_KNMLB181A_2025_12_16_145738

For continual product development, LG reserves the right to change specifications without notice.
© LG Electronics U.S.A., Inc., Englewood Cliffs, NJ. All rights reserved. "LG Life's Good" is a registered trademark of LG Corp. /www.lghvac.com